COMITÉ EUROPÉEN DES ASSURANCES

SECRETARIAT GENERAL
3bis, rue de la Chaussée d'Antin F 75009 Paris
Tél. : +33 1 44 83 11 73 Fax : +33 1 44 83 11 85
www.cea.assur.org

DELEGATION A BRUXELLES
Square de Meeûs, 29 B 1000 Bruxelles
Tél. : +32 2 547 58 11 Fax : +32 2 547 58 19
www.cea.assur.org

PROPERTY INSURANCE COMMITTEE

Prevention Specifications

FIRE EXTINGUISHING SYSTEMS USING NON-LIQUIFIED "INERT" GASES PLANNING AND INSTALLATION

CEA 4008: April 2005 (en)

Copyright by CEA – 3 bis, rue de la Chaussée d'Antin – 75009 PARIS

Contents:

1 GENERAL 6

1.1 SCOPE 6
1.2 AIMS 7
1.3 DEFINITIONS 8
1.4 DESCRIPTION OF THE INSTALLATION 9
1.5 PERSONNEL SAFETY 10
1.6 ALARM ORGANISATION 11
1.7 APPLICATION AND EFFECTIVENESS 12
1.8 UNITS 12

2 DESIGN OF THE INSTALLATION 12

2.1 TYPE OF INSTALLATION AND STRUCTURAL REQUIREMENTS 12
2.2 EXTINGUISHING AGENT QUANTITY 14
2.3 DESIGN CONCENTRATION 16
2.4 STORAGE QUANTITY 17
2.5 RESERVE QUANTITY 18
2.6 GAS STORAGE 18
2.7 GAS STORAGE AREA 18
2.8 HYDRAULIC CALCULATION 19
2.9 DISCHARGE TIME 19
2.10 HOLDING TIME 19

3 DISTRIBUTION PIPEWORK 20

3.1 PIPES 20
3.2 PIPE SUPPORTS 21
3.3 SELECTOR VALVES 23
3.4 NOZZLES 24

4 DETECTION 24

4.1 TYPE OF DETECTORS 24
4.2 CRITERIA OF SELECTION OF DETECTORS 24
4.3 ELECTRICAL FIRE DETECTION SYSTEMS 26
4.4 MECHANICAL AND PNEUMATIC DETECTION SYSTEMS 26

5 CONTROL AND TRIGGERING 28

5.1 DELAY DEVICE 28
5.2 MANUAL TRIGGERING DEVICE 28
5.3 EMERGENCY TRIGGERING DEVICE 28
5.4 DISABLE DEVICE 28
5.5 ALARM DEVICES 29
5.6 WIRING 29
5.7 CONTROL LINES 29
5.8 CONTROL CONTAINER 29
5.9 TRIGGERING OF ANCILLARY EQUIPMENT 30
5.10 POWER SUPPLY OF ELECTRICAL INSTALLATIONS 30

6 INSTALLATION AND TESTING 31

6.1 INSTALLATION 31
6.2 TESTING 31

7 USE OF THE INSTALLATION 32

7.1 INSTRUCTION AND TRAINING OF PERSONNEL 32
7.2 INSPECTION 32
7.3 LOG BOOK 33
7.4 OTHER OBLIGATIONS 33

8 MAINTENANCE 33

9 DOCUMENTATION 33

10 APPROVALS 34

11 MONITORING OF GAS EXTINGUISHING SYSTEMS 36

11.1 General 36
11.2 Disable and triggering devices and selector valves 36
11.3 Agent quantity measurement 36
11.4 Electrical lines 36
11.5 Electrically- operated components 36
11.6 Monitoring and control lines 36
11.7 Storage area 37
11.8 Fault indication 37
11.9 Power supply of the monitoring installation 37
11.10 Requirements for components of the monitoring installation 38

APPENDIX A1 PHYSICAL PROPERTIES OF THE EXTINGUISHANT 39

A.1.1 purity requests 39
A.1.2 Physical properties 39

APPENDIX A2 BLOCK DIAGRAM FOR AN INERT GAS SYSTEM 40

APPENDIX A3 COMPONENTS, SYSTEMS, CALCULATION METHODS 41

A3.1 Components 41
A3.2 System approval 41
A3.3 Calculation method 41

APPENDIX A4 TESTING METHODS TO DETERMINE THE EXTINGUISHING CONCENTRATION OF FLAMMABLE LIQUIDS AND GASES BY MEANS OF "CUP-BURNER" 42

APPENDIX A5 STRUCTURAL CONSTRUCTION OF THE ENCLOSURE 44

APPENDIX A6 CALCULATION FORMULA FOR PIPEWORK 46

APPENDIX A7 PRESSURE RELIEF DEVICES FOR THE PROTECTED ENCLOSURE 49

APPENDIX A8 REQUIREMENTS FOR PRESSURE RELIEF DEVICES 54

APPENDIX A9 TESTING METHODS FOR DETERMINATION OF EXTINGUISHING CONCENTRATION BY MEANS OF ENCLOSURE FIRE TESTS 56

A9.1. Principle 56
A9.2. Extinguishing system 56
A9.3. Extinguishing concentration 56
A9.4 Wood crib test 57
A9.5 Heptane pan test 62
A9.6 Polymeric sheet fire test 63
A9.7 PVC Cable tray fire test 68

APPENDIX A10 DOOR FAN TEST FOR DETERMINATION OF HOLD TIME 72

A10.1 Scope 72
A10.2 Test for determination of predicted hold time 72
A10.3 Treatment of enclosures with predicted minimum hold times less than the recommended value 80
A10.4 Report 81

APPENDIX A11 EXAMPLE FOR DESIGN OF PIPES AND PIPE CONNECTIONS 83

APPENDIX B1 EXTINGUISHING AND DESIGN CONCENTRATIONS FOR ARGON ... 85

APPENDIX B2 EXTINGUISHING AND DESIGN CONCENTRATIONS FOR IG541 87

APPENDIX B3 EXTINGUISHING AND DESIGN CONCENTRATIONS FOR NITROGEN 89

APPENDIX B4 EXTINGUISHING AND DESIGN CONCENTRATIONS FOR IG55 91

1 GENERAL

This specification for fire extinguishing systems using inert gases is created based on CEA specifications for planning and installation for fire extinguishing systems using non-liquefied inert gases and other national and international guidelines.

The existing rules “Fire extinguishing systems using non-liquefied inert gases – Planning and installation”, CEA 4008, are replaced.

1.1 Scope

1.1.1 This specification gives the requirements for design, installation and maintenance of fire extinguishing systems using inert gas when used for the protection of buildings, industrial manufacturing plants, and for the extension or modification of existing installations.

This specification details requirements for specified inert gases that are stored and discharged in gaseous phase, see Appendix A1. The gases covered by these rules may be extended in the future[1]. It is not the intention of the specification to indicate approval of any of the extinguishants listed.

Inert gas	Consistence	More Information	Trade names
Argon	Argon	Appendix A1, Appendix B1	
IG541	52% Nitrogen, 40% Argon, 8% carbon dioxide	Appendix A1, Appendix B2	e.g.: Inergen
Nitrogen	Nitrogen	Appendix A1, Appendix B3	
IG55	50% Argon, 50% Nitrogen	Appendix A1, Appendix B4	e.g.: Argonite
Table 1.1: Inert gases			

The specification includes not only requirements for inert gas system installations and associated components, but also requirements for buildings and objects to be protected. These rules are in accordance with the current state of the art.

The specification covers objects

- which are listed in clause 2.3 and for which the design concentration is stated
- for which the design concentration is defined in clause 2.3.2
- which extinguishing and design concentration is checked by approved test methods. Quantity must be co-ordinated with the inspection body authorized by the insurers. A request for exception must be submitted to this body.

The system shall be planned and installed by an approved installer according to this specification, using approved, compatible components. Approval is given by an accredited certification body accepted by the Insurers based on CEA-standards for components. In the future, CEA component standards are replaced by EN 12094-series.

Due to his qualification, the installer must be able to guarantee effective fire protection also in situations not covered by this specification. The appropriate authority shall be consulted with regard to factors (e.g. configuration, design, installations or combustible material) not covered by these rules.

This specification covers extinguishing systems for protecting the complete content of a room or enclosed object (total flooding systems). This specification does not cover systems for protection of objects that are not completely enclosed[2], explosion

1 To include additional agents, application should be made to CEA..

2 For protection of electrical and electronic installations the specifications CEA 4007, paragraph 11.5 have to be used.

suppression and inerting systems (see also clause 2.1.1).

1.1.2 This specification describes the minimum requirements.

In this document:

- "shall" indicates a mandatory requirement,
- "should" indicates a recommendation.

1.1.3 The non-existence of regulations in this specification does not authorise the installer to design without agreement of the appropriate authority.

1.1.4 Inert gas installations shall comply with this specification and any national legislation[3].

1.1.5 Actuation of the installation can be automatic and manual or only manual. Installations according to this specification must be actuated automatically, if possible.

1.2 Aims

1.2.1 The function of the installation is to extinguish a fire in the earliest stage of development by reducing the oxygen concentration. It may be necessary to maintain inert gas concentration for a period of time to prevent reignition.

1.2.2 The design, installation and approval shall be based on a detailed knowledge of the protected zone, its use and associated alarm organisation.

It is important to consider the fire precautions of the premises as a whole. An installation may be a "stand alone" fire protection system or part of a combination of other fire protection measures.

3 See appendix Z

1.3 Definitions

Alarm device:
Device which emits audible or visual alarm signals.

Authority:
Body having jurisdiction over aspects of the installation, e.g. Insurer, fire brigade, government agencies, authorized inspection body.

Calculation zone:
Zone for which the design quantity of gas required is calculated independently.

Control device:
Device for initiating the discharge process, actuation of the alarm device and any ancillary control equipment.

Deep seated fire:
Fire involving solids subject to smouldering inside the solid combustible material.

Delay device:
Automatic device which delays the release of the gas for a pre-determined period of time (pre-warning time), to permit evacuation of personnel.

Delay time:
A pre-set time period between the triggering of the system and the discharge.

Design concentration:
Minimum concentration for extinguishing agent including safety factors which has to be achieved inside the protected enclosure .

Design quantity:
Quantity of gas to be discharged into the calculation zone.

Discharge time:
Time period from opening the container valves until reaching 95% of the design concentration within the whole flooding zone.

Emergency triggering device:
Manually operated device which can be used to trigger the installation in the event of failure of the normal triggering device.

Emergency stop device:
Manually operated device which prevents the release of gas.

Extinguishing concentration:
Minimum concentration of extinguishing agent required to extinguish the flame of a given fuel under defined experimental conditions excluding any safety factor.

Fire detection device:
Device reacting to the fire characteristics, i.e. smoke, heat or flames.

Fire detector:
Fire detection device complying with EN 54.

Flooding zone:
Zone comprising all calculation zones to be flooded simultaneously with inert gas.

Holding time:
Time from exceeding the design concentration to the time of falling below the design concentration for 85% at 10% and 90% of the maximum room height.

Inert gas:
Slowly reacting gas or mixture of gas that does not take part in the combustion process, not as fuel and not as oxidant.

Installation:
Installed inert gas fire extinguishing system.

LOAEL:
Lowest Observable Adverse Effect Level, i.e. the lowest concentration at which an adverse toxicological or physiological effect has been observed.

Local application system:
System designed to protect objects that are **completely** enclosed (see also 2.1.1).

NOAEL:
No Observed Adverse Effect Level, i.e. the highest concentration at which no adverse toxicological or physiological effect has been observed.

Non-electrical disable device (lock-off device):
Mechanical device that prevents the release of gas while maintenance, inspection or service work is being carried out in the protected zone.

Inert gas storage area:
Room or area housing the gas supply container(s).

Pre-warning time:
Time period, to warn endangered personnel, between the start of the warning indication and discharge.

Pressure relief device:
mechanically operated device, limiting the pressure increase in the area to be protected to a pre-set value.

Release mechanism:
Mechanism that upon actuation by the control device automatically opens the container valve and if fitted, a selector valve, to release the gas.

Selector valve:
Valve in the main feed pipe that directs the gas from the supply container(s) to the appropriate flooding zone.

Surface fire:
Fire involving flammable liquids, gases and solids not subject to smouldering. For these fires burning takes place in a zone of mixed fuels (as gas) and air.

Supply quantity:
Total quantity of gas kept available for use within a flooding zone, comprising the design quantity and any supplementary quantity required to compensate for filling variations.

System:
System of components which are approved for correct function and compatibility with one another.

Total flooding system:
Installation to protect the complete contents of an enclosure.

1.4 Description of the installation

1.4.1 The block diagram shown in Appendix A2 illustrates the functional interaction between the components which shall or may be present in an installation.

Inert gas installations, in general, consist of gas containers, valves, fixed pipework with appropriately located nozzles in the protected zone and devices for detecting the fire, alarms, triggering and release.

The gas is stored in pressurized containers at room temperature.

1.4.2 Automatic detection and triggering devices or manual triggering devices are used to actuate the system. This may be achieved using any approved method or device which can be used to recognize and indicate the presence of heat, flames or smoke in the protected zone.

1.4.3 The control equipment starts alarm devices, if necessary a delay device, and activates the release mechanism of vessels and – if available – area valves.

Automatic triggering and release might be done by mechanic, pneumatic or electrical systems resp. combination of these systems.

1.4.4 The installation may be equipped with automatic devices used to switch off machinery and close fire doors and other equipment, the purpose being to build up and to hold the desired gas concentration.

1.5 Personnel safety

1.5.1 In any installation where personnel could be endangered, suitable safeguards shall be provided to ensure prompt evacuation of the zone, and to prevent entry into the zone after discharge and to provide means for prompt rescue of any trapped personnel. Such safety aspects as personnel training, warning signs, alarm and delay devices shall be considered.

For manned areas, a delay device with sufficient delay time for personnel to evacuate the area without undue haste shall be provided to ensure doors are closed before agent release thus property protection objectives are achieved.

1.5.2 The following requirements shall be met:

> provision of exit routes, which shall be kept clear at all times, and provision of adequate direction signs,

> a flooding zone shall not serve as the only evacuation route for other zones,

> provision of only outward-opening self-closing doors which shall be openable from the inside even when locked from the outside,

> provision of alarms that are distinctive and independent from all other alarm signals and that shall operate immediately upon detection of the fire,

> provision of illuminated signs at entrances to the protected zone, to alert personnel to the danger due to flooding. The illuminated sign shall be maintained until the atmosphere has been made safe. Alternatively the re-entry of personnel should be prevented by locking the doors.

> provision of warning and instruction signs at entrances to the protected zone,

> provision of means of ventilating the zones after releasing gas. If not available it shall be guaranteed that such means of ventilation are provided after release (for instance by fire brigade).

> provision of non-electrical disable device,

> provision of any other safeguards that a careful study of each particular situation indicates are necessary.

The following should be considered:

> provision of self-contained breathing equipment and personnel trained in its use,

> provision for adding a non-flammable and non-toxic odour to the gas so that hazardous atmospheres may be recognised.

1.5.3 Additional safety precautions shall be taken if one of the following conditions can occur:

- when the oxygen concentration falls short of 10 Vol%
- when the carbon dioxide concentration exceeds 5 Vol%

Consideration shall be given to the risk of leakage of gas into adjacent zones where hazardous concentrations could be reached.

It shall be taken into account that the final concentration in the flooding zone can be higher than the design concentration (e.g. because of additional quantities).

1.5.4 In all cases, national regulations relating to personnel safety shall be observed.

1.6 Alarm organisation

An effective method of alarm organisation shall be provided to:

> alert appropriate persons,

> alert the fire brigade,

> initiate other required measures.

See also clause 5.5.

1.7 Application and effectiveness

1.7.1 In order to determine the extent of the protection, a risk analysis shall be carried out.

1.7.2 It may be necessary to maintain gas concentration for a period of time (e.g. until hot surfaces are cooled off) to prevent reignition. Extinguishing agents are limited. After first operation, the remaining extinguishing agent is normally triggered manually for a possible re-operation. Therefore, effective installations shall extinguish immediately and finally.

1.7.3 Inert gas can extinguish fires listed in clause 2.3. If used for different risks, inert gas cannot extinguish fires involving:

> chemicals containing an oxygen supply, such as cellulose nitrate,

> mixtures containing oxidizing agents, such as sodium chlorate,

> chemicals capable of autothermal decomposition, such as some organic peroxides,

> reactive metals, such as sodium, potassium,

> solid materials in which fires may quickly become deep seated,

For special cases, the appropriate authority shall be consulted.

1.8 Units

Pressure values not marked as pressure gauge are absolute pressure.
Not explicitly specified dimensions are SI-units.

2 DESIGN OF THE INSTALLATION

2.1 Type of installation and structural requirements

2.1.1 This specification covers only total flooding systems and objects that are completely enclosed.

2.1.2 Buildings, rooms and enclosed objects (flooding zones), protected with inert gas total flooding systems, shall be of such a nature that the effective gas concentration will be reached and maintained for a sufficient time.

2.1.3 The integrity of the enclosure (walls, ceilings, floors, doors, windows etc.) shall withstand any increase of pressure during discharge. Pressure relief devices shall be provided, to prevent excessive pressure fluctuations in the flooding zone.

Note: An architect or building consultant should evaluate the strength of the construction (pressure difference).

Pressure relief devices shall be opened only in the event of design thresholds being reached. They shall close automatically when the pressure differential has dissipated. An example of the calculation method for pressure relief devices is given in appendix A7.

Pressure relief devices shall lead outside the building, but not in the direction of windows or ventilation systems of other rooms. Personnel safety consideration shall be met.

Pressure relief devices shall meet the requirements according to appendix A8.

2.1.4 The construction and location of the enclosure should be in accordance with Appendix A5, taking account of the protection objectives. The enclosure shall be non-combustible or have a fire resistance of at least 30 minutes according to national rules so that the enclosure is maintained until the end of the holding time.

Openings shall be closeable with closures meeting the specified criteria. Closure of openings shall be triggered by the extinguishing installation or by the same system that actuates the extinguishing installation.

Requirements listed in appendix A5 might not be sufficient to meet national regulations.

2.1.5 Structural parts of the enclosure that do not meet the requirements according to clause 2.1.1 to 2.1.4, shall be rated as non-closeable openings.

2.1.6 Non-closeable openings that are supposed in case of fire to lead directly outside the building are not permitted.

2.1.7 Non-closeable openings or non-suppressible ventilation are not permitted. If, in exceptional cases, non-closeable openings or non-suppressible ventilation are inevitable, the planning shall be done in accordance with the appropriate authority. It shall be proven that both the surface area of all openings, which are supposed to exist in case of fire, and the non-suppressible ventilation will not impair the demanded holding time. If this requirement is not met, the installation shall be performed as a local application system for not or not completely enclosed objects using a proper extinguishing agent.

2.1.8 If openings are operationally necessary, proper measures shall be taken to guarantee that closure is complete before commencement of the extinguishing agent discharge.

Operationally-open fire protection covers shall have reusable locks.

2.1.9 Smoke and heat exhaust ventilation systems
In rooms with gas extinguishing systems, smoke and heat exhaust ventilation systems (SHEVs) shall not open automatically. SHEVs shall be triggered manually. In case of fire, only authorised persons shall trigger the SHEVs. The triggering device has to be protected against unauthorised access. If fast temperature rise is assumed (e.g. lacquer production, production and processing of foam, storage of flammable liquids) smoke and heat exhaust ventilators shall be heat-resistant in order to avoid damage before the end of the extinguishing agent discharge (see table in appendix A5).

2.2 Extinguishing agent quantity

2.2.1 The required gas design quantity is to be determined in accordance with the following formula.

$$Q = \rho_{gas} \cdot \ln\left(\frac{100}{100 - C_A}\right) \cdot \left(V_R + k \cdot A_R\right) =$$

$$= \rho_{gas} \cdot \ln\left(\frac{100}{100 - DF \cdot C_L}\right) \cdot \left(V_V + 4 \cdot V_Z - V_G + k \cdot (A_V + 30 \cdot A_0)\right)$$

with the following definitions:

C_A = DF. C_L
V_R = V_V+4 V_Z-V_G
A_R = A_V + 30 A_o
Q = inert gas design quantity, in kg.
ρ_{Gas} = density of the inert gas, in kg/m^3.
(at a pressure of 1013 mbar[4] and a temperature of 20°C[5].)
C_A = design concentration, in vol% gas (see table 2.1 and 2.2),
C_L = extinguishing concentration in vol% gas determined under test conditions specified in Appendices A4 and A9.
DF = design (or safety) factor
= 1.3 . scaling factor – if the extinguishing concentration is specified by "cup burner"-testing method (appendix A4)[6],
= 1.3 – if the extinguishing concentration is specified by enclosure fire tests (appendix A9)

A_V = Total surface of the calculation zone including openings A_o, in m^2.
A_0 = Total surface of all non-closeable openings in m^2.
A_R = Calculated enclosure surface in m^2.
V_V = Volume of the enclosure or the volume of the object, in m^3.
V_Z = Volume insufflated or absorbed by non-suppressible ventilation, in m^3.
V_G = Volume of the building structure which can be deducted, in m^3.
V_R = calculated volume in m³.
k = compensation constant: 0.27 (this dimension is necessary to get the right dimension in the formula).

The "volume term" $\rho_{gas} \cdot \ln\left(\frac{100}{100 - C_A}\right) \cdot V_R$ comprises the minimum quantity of gas taken as a basis for the formula.

The "surface term" $\rho_{gas} \cdot \ln\left(\frac{100}{100 - C_A}\right) \cdot (k \cdot A_R)$ comprises the portion of gas that can escape due to leakage from the enclosure.

The factor 0.27m in "surface term" can be a lower value if the build-up and holding of gas concentration can be ensured because of the construction of the enclosure and a full flooding test, or equivalent[7] with measurement of the concentration undertaken for confirmation purposes (requirements according to table 2.2) see clause 10.1.6.

---

[4] If the environmental pressure is more than 11% (is equivalent to ca. 1000m altitude difference) less or more than normal pressure (1013 bar), the density of the corresponding pressure has to be used for calculation of quantity.

[5] If the temperature in the protected room is lower than 10°C, the density at the room temperature shall be used.

[6] See clause 2.3.2

[7] such as the fan test (Appendix A10)

If $V_R + k\ A_V > 1.47.V_R$ then the gas quantity calculated according to the following formula can be taken as the upper limit for the design quantity:

$$Q_{\max} = \rho_{gas} \cdot \ln(\frac{100}{100 - C_A}) \cdot (1.47 \cdot V_R + k \cdot 30 A_0)$$

In this case A_v and not $A_R = A_V + 30\ A_o$ shall be used.

The design quantity, however, shall be at least equal to the "volume term" specified in the basic formula:

$$Q_{\min} = \rho_{gas} \cdot \ln(\frac{100}{100 - C_A}) \cdot V_R$$

In any case an additional quantity for openings $\rho_{gas} \cdot \ln(\frac{100}{100 - C_A}) \cdot (0.27m \cdot 30 A_0)$ is necessary.

2.2.2 If calculation zones are not separated as described in clause 2.1.4 or separated 5 m as a minimum they shall form one flooding zone.
If closures of openings are actuated by the extinguishing installation combustible materials shall not be stored or processed within a radius of 2,5 m.

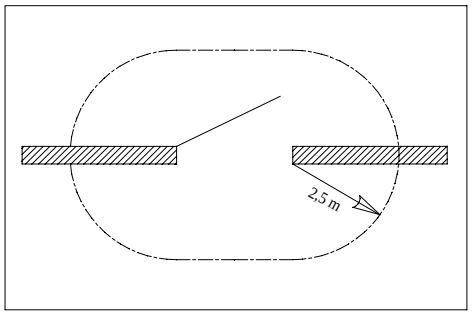

Figure 2.1 Requirements for flooding zones

2.2.3 A maximum of two separate flooding zones may be combined for simultaneous flooding.

2.2.4 The sum of all calculation zone boundary surfaces (A_V) shall be used in the formula of clause 2.2.1 in accordance with the following.

- The boundary surface of total flooding installation is the sum of any area of walls, ceilings and floors. This applies to local application systems accordingly.
- The boundary surface between the calculation zones of one flooding zone may be omitted when determining A_V in the formula specified in clause 2.2.1.

2.2.5 The total supply quantity shall be calculated for the flooding zone with the largest extinguishant demand.

2.2.6 Figure 2.2 shows the maximum quantity per flooding zone.

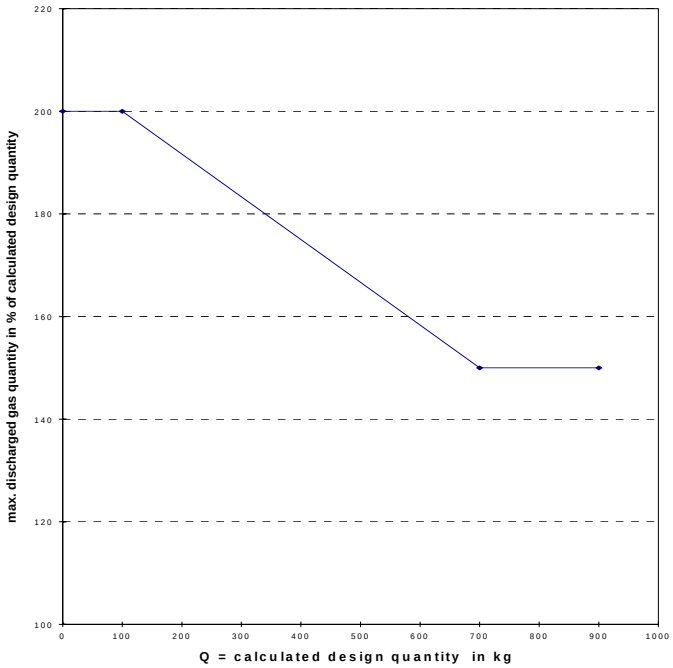

Figure 2.2 Maximum quantity

The maximum quantity according to clause 2.2 may be exceeded in case of cable floors, if this is necessary to meet the requirements of clause 3.4.1 (maximum protection area per nozzle: 30 m²).

2.3 Design concentration

2.3.1 The numerical values for design concentration given for the flammable materials and special risks listed in Table 2.1 and table 2.2 are to be inserted in the formula specified in clause 2.2.1 which is used to determine the gas design quantity.

Note: Detailed information related to table 2.1 and table 2.2 in appendix B1 to B3.

If there are different materials in one calculation area, the maximum design concentration shall be used.

Material	argon	IG541	Nitrogen	IG55
Acetone	60.5	49.5	46.6	
Diethyl ether	69.9	55.7	52.7	
Ethyl alcohol	68.8	55.4	53.8	
Methanol	86.7	68.3	64.3	
n-heptane	53,8	48.1	47.6	48,1
n-hexane	64.7	54.3	50.9	
n-pentane	65.1	51.3	50.5	
toluene	55.4	43.8	43.7	

Table 2.1 design concentration for flammable liquids in Vol% agent

Material	Argon	IG541	Nitrogen	IG55
Computer installations, EDP-rooms, electrical switch and distribution	50,4	45.7	45.2	45,7

rooms*, **				
Cable floors*	50,4	45.7	45.2	45,7

* Holding time (difference between design concentration and falling short of 85% of design concentration) in 10% and 90 % of maximum room height shall be at least 10 minutes.
** Storage or processing of material is not allowed.

Note 1: Appendix A9 shows testing methods for design concentration for plastics (e.g. IT). The maximum of the four determined design concentrations for plastics and cables shall be the basis for design concentration. Due to a lack of test data according to this new test methods, for a transition period the concentrations for IT-, EDP-risks in table 2.2 are based on 95% of heptane design concentration. This may result in a lower level of protection. Within 3 years after publication of these rules, the standard, including table 2.2, will be revised taking into account available results of testing.

Note 2: The concentrations given in table 2.2 may not be sufficient in case of power cables when the power is not shut down and therefore cables and/or equipment are energised during the extinguishment period.

Table 2.2. design concentration for special installations in vol% gas

2.3.2 The design concentration for hazards not listed shall be determined by using the cup-burner apparatus described in Appendix A4, by using the enclosure fire test (see appendix A9) or any other test method giving equivalent results.

The design factor DF of extinguishing concentration depends on the chosen testing method:

DF = 1.3 x scaling factor
If the extinguishing concentration is determined by “cup-burner”-method (appendix A4)

DF = 1.3
If the extinguishing concentration is determined by “enclosure fire tests” (appendix A9)

If the extinguishing concentration determined by the “cup-burner” –method (appendix 4) is higher then the extinguishing concentration determined using the “enclosure fire tests” (appendix 9), the value from the “cup burner”-method shall be used as a basis for the determination of the design concentration.

As an indication, a value of 1.2 is given for the scaling factor, but in each case the design shall be co-ordinated with the authority.

Note: if both, detailed results from extinguishing tests for flammable liquids according to appendix A9 are available and it is possible to determine the scaling factor from tests according to appendices A4 and A9, the scaling factor will be fixed.

The design concentration results from the multiplication of the extinguishing concentration and the corresponding design factor.

Notes: The resultant concentration may be higher than the calculated design concentration and, therefore, consideration should be given to safety of personnel, see clause 1.5.

2.4 Storage quantity

The design quantity for the flooding zone with the maximum necessary agent quantity shall be stored including the following additional quantities:

- for installations with maximum 19 containers[8] an additional quantity for leakage

[8] the number of containers for storage of design quantity for each flooding zone is decisive. In case of multi-

loss, filling and withdrawing tolerance of minimum 10% of design quantity. For 20 or more containers an additional quantity of at least 5 %.

- if necessary, an additional quantity to ensure for the system, that the gas quantity is sufficient to achieve 95% of design quantity during discharge time in the protected area

2.5 Reserve quantity

A reserve quantity of the same amount as the supply quantity shall be permanently connected for the following conditions:

> when more than five flooding zones are connected to the installation,

> if the gas supply quantity cannot be replaced within 36 hours.

A reserve quantity of the double amount as the supply quantity shall be permanently connected when more than 30 flooding zones are connected to the installation.

2.6 Gas storage

2.6.1 The gas supply quantity and reserve quantity shall be stored in such a way that it is available at all times and cannot be used for other purposes.

2.6.2 For factory-filled containers, the container volumes shall be 5.4 litres, 8 litres, 10.7 litres, 13.4 litres, 27 litres, 40 litres, 67 litres, 80 litres or 140 litres maximum.
Only one container size and one filling pressure shall be used in an installation.
The filling tolerance per bottle shall be +0/-5 % of the nominal value of the mass or pressure (in bar).

2.6.3 The containers shall be installed so that each individual container can be easily mounted and shall be fitted with a check valve to the manifold if there is more than one container.

2.6.4 The quantity of available extinguishant (if applicable, the reserve quantity) shall be monitored. Any loss in weight or pressure of more than 10% of the extinguishant in any container shall be automatically indicated.

The checking unit shall be easily manageable and ensure that, during the test, no gas will leak from the bottles.

2.5.5 All legal and official regulations for pressure containers[9] must be met.

2.7 Gas storage area

2.7.1 The gas storage area should be located in a separate room, which is not exposed to excessive risk of fire, and be located as close as possible to the flooding zone.

2.7.2 The gas storage area shall be:

> easily accessible, even in the case of fire,

> protected against access by unauthorised persons,

> used for this purpose only, no (flammable) materials shall be stored.

> normally kept at a temperature between 0°C and 35°C,

> equipped with ventilation,

---

area installations, the additional quantity may vary depending on the flooding zone.

9 see appendix Z

> planned in such a way that maintenance and inspection can be easily carried out,

> electrically illuminated,

> if necessary heated.

The components installed in the gas storage room shall be protected against over heating caused by sunlight or other sources.

The gas storage room shall be separated from neighbouring rooms/areas and protected from mechanical and chemical influences.

2.7.3 Operating instructions shall be permanently fixed inside the gas storage area in a visually unobstructed position.

Available in the gas storage area shall be,

- the name of the company responsible for maintenance of the system,
- the year of installation or essential change,
- instructions for use, and maintenance and relevant data for the installation.

These instructions shall contain:

- Operating instructions of the gas extinguishing system with scheme of plumbing and control
- If necessary the information about the number of weights used for opening the container valves
- General drawing showing the protected areas.

2.8 Hydraulic calculation

The nozzles and pipework shall be dimensioned in such a way that the required gas quantity to achieve 95% of design concentration shall be discharged into the flooding zone within the discharge time specified in clause 2.9.

Attention shall be paid to the temperature of the gas container room.

As a basis for the calculation, the method described in Appendix A6 can be chosen.

Any other method used shall be approved by a certification body accepted by the Insurers.

2.9 Discharge time

Referring to table 2.1, the discharge time shall not exceed 60 seconds and the design concentration at any point within the enclosure shall be achieved.

If areas with slow growing fires are to be protected (see table 2.2), the discharge time shall not exceed 120 seconds. The design concentration shall be achieved at any point within the enclosure.

2.10 Holding time

The holding time (difference between design concentration and fall short of 85% of design concentration in the room, i.e. 10% and 90 % of maximum height) shall be at least 10 minutes. Holding time for special applications is shown in table 2.2.

3 DISTRIBUTION PIPEWORK

3.1 Pipes

3.1.1 Pipes and pipe connections shall be made of metal and be able to withstand the pressures specified in Table 3.1 and any low temperature encountered.

The piping including design and wall thickness shall comply with the national regulations. Examples for detailed requirements are given in Appendix A11.

A safety valve shall protect sections of pipe that could be subjected to static head pressure, i.e. closed pipework.

	Service pressure bar	Test pressure bar**	Sort of pipe	Certificate according to EN10204
Pipework between container and selector valve*	as in the container at maximum temperature according to clause 2.7.2	1.5 times service pressure	seamless welding	3.1 B 3.1 B 3.1 B 3.1 B
Pipework downstream of selector valve	as calculated	1,5 times as calculated	seamless welding	2.2 2.2
Fitting downstream of selector valve	as calculated	1,5 times as calculated		2.2
* Safety valves shall ensure that service pressure cannot be increased by leakage from the container valves ** leakage test of the pipes shall result from tests of inside pressure with water according to the standard or a useful test without destruction				

Table 3.1 Pipe quality requirements

Fittings have to be calculated according to table 3.1 for the occurring service pressure. Fittings shall be suitable for deeper temperatures (ca. –50°C).

Regarding the nozzle pipe network of gas extinguishing systems a certificate according to EN 10204 shall be submitted. This certificate shall confirm, that the pipes are designed depending on the occurring service pressure.
Regarding manifolds and distribution pipes a test certificate of the manufacturer according to EN 10204 shall proof that the pipes are dimensioned for the required service pressure. All used materials and parts shall be listed in the certificate.

Pipework between container and selector valve shall be marked by the manufacturer, so that an identification according to the test certificates is possible after installation. Manifolds and distribution pipes may be marked as a kit by an authorised person. A non-ambiguous correlation to the test certificate must be possible.

3.1.2 Flexible pipes and hoses etc. shall only be used where fixed pipes are unsuitable. Flexible pipes and hoses shall be as short as possible.

3.1.3 Pipes smaller than DN8 (nominal diameter 8mm) are not permitted. Pipes smaller than 10 mm have to be galvanised or made of stainless steel.

3.1.4 The inside and outside of pipes shall be effectively protected against corrosion if this is necessitated by environmental conditions. To protect sensitive machinery, e.g. computers, from corrosive particles in the pipework, galvanised steel should be used as a minimum. Special-alloy steels and/or suitable surface protection coatings shall be used if the use of pipes and connections made of steel does not provide sufficient corrosion protection.

Pipes in rooms with electrical and electronic risks must be galvanised.

3.1.5 Welding on site shall not be performed for pipes smaller than or equal to DN50, except in factories with approved factory welding methods.

The welding procedure shall be in accordance with the national regulations. Fire hazard works are not permitted in areas protected by gas extinguishing systems.

3.1.6 If condensation water can form in the pipework, suitable means shall be provided for drainage. Drainage points shall not be accessible to unauthorised persons.
Drainage points have to

- easy to use (e.g. stop valve with plug)
- easy to maintain
- the installation must be pendulous (leaving from pipeline directly downwards or sideways justified to the lower edge of the pipeline)

If an automatic drainage point is used, it must be approved.

3.1.7 The pipework shall be arranged so that it cannot be damaged by its own weight, temperature fluctuations, vibration, release of gas or other installation-inherent influences. All pipework shall be accessible.

3.1.8 The gas installation pipework shall be earthed. If necessary, electrical connections equipotential bonding (e.g. regarding non-conductive pipe joints) between all pipes shall be provided or the installation shall be earthed at different points (auxiliary equipotential bonding).

Notes:

- *In ex-areas the national regulations have to be met*
- *Regarding lightning protection the national regulations have to be met.*

3.2 Pipe supports

3.2.1 The low temperature generated when gas is discharged shall be taken into account when designing pipe supports. Pipe support anchors shall also be able to withstand prevailing static and dynamic loads.

Change in length of pipe due to thermal effects shall be borne in mind.

3.2.2 Pipe supports shall be designed so that under extreme load there is no danger of the installation being damaged.

This condition is deemed fulfilled when the supports have been designed and constructed using main and additional load as a basis.

If the temperature rises from +20°C to +200°C, the ultimate tensile strength of the material used shall not be reduced by more than 25%. Combustible materials shall not be used.

Supports that do not conform to the requirements of clauses 3.2.2 to 3.2.7 shall be specially approved.

3.2.3 For minimum cross-sectional area of supports see Table 3.2.

In the case of pipe supports which are designed such that the load is distributed over more than one individual cross-sectional area, the sum of the individual cross-sectional areas acting parallel to one another shall be at least 1,5 times the respective minimum cross-sectional area.

Pipe nominal diameter mm	Rated load N	Minimum cross-sectional area of support (mm^2) /thread size	Minimum depth for fastening plugs in concrete mm
≤DN50	2000	30 (M8)	30
>DN50 ≤ DN100	3500	50 (M10)	40
>DN100 ≤ DN150	5000	70 (M12)	40
>DN150 ≤ DN200	8500	125 (M16)	50
>DN200 ≤ DN250	10000	150 (M20)	60

Table 3.2 Supports

Each individual cross-sectional area shall not be less than $30mm^2$. In determining whether pipe supports have more than one individual cross-sectional area acting parallel to one another, holes for bolts and rivets do not have to be taken into account. Pipe clips and other devices for holding pipe shall completely surround the pipe and be closed.

3.2.4 The material from which a pipe support is manufactured shall be at least 3mm thick. If galvanised, a thickness of 2,5mm will suffice. This does not, however, apply to a pipe support made from hot-dip galvanised material, which may have a minimum size of 25mm x 1,5mm for pipes up to DN50 (12mm x 1,5mm, if type approved).

3.2.5 In the case of support systems where threaded rod is screwed into a blind hole, provision shall be made at the other end of the threaded rod for adjustment in order to allow the threaded rod to project a minimum of 20mm through the thread.

3.2.6 Support brackets for pipes up to DN50 may be attached to a sloping bearing surface. This surface shall not deviate from the horizontal plane by more than 10°. A bracket may only be subjected to vertically acting loads. The clamping screws shall engage on the sloping support surface.

3.2.7 Pipe supports shall not be used for any other purpose and should be attached near joints in the pipe.

3.2.8 The required length of fastening plug depends on the type of plug used and on the type of material into which the plug is driven. Plugs shall be made of non-combustible material. The fixing point shall be able to absorb twice the load stated in Table 3.2.

Pipe supports shall connect the pipework directly to the building structure and shall not be used as supports for other objects. Building members, to which primary supports are attached, shall be strong enough to take the load. If not, additional links to load-bearing members shall be created.

Only pipes up to DN50 may be attached to a steel trapezoidal sheet or slabs made of gas concrete or pumice concrete. The appropriate authority shall approve the design. Care shall be taken to ensure that pipework is supported by a load-bearing structure at a maximum of 12m spacing and that the last nozzle is no more than 2m away from such a support.

Fastening plugs in gas concrete or pumice concrete shall be at least 150mm way from the edge of any slab.

3.2.9 If, in exceptional cases, it is necessary to fasten pipework to equipment or structural members, it shall be remembered that, in calculating the strength of the fixture for the equipment or structural member, at least double the main load and design load for the pipe given in Table 3.2 shall be used.

3.2.10 All pipe runs longer than 1m shall be fixed with supports. The maximum distance between two supports along the pipe shall not exceed the values given in Table 3.3.

Pipe diameter (mm)	Maximum distance between supports (m)
≤ 25	2
> 25 < 50	3
≥ 50	4

Table 3.3 distance of supports

3.2.11 If, in the case of pipes >DN50, the 4m spacing cannot be adhered to for building design reasons, the distance may be increased to 6m, if the pipe is provided with double supports.

In this case two independent supports fixed with the building shall be used at each support.

Additional supports are required in cases where greater loads (such as valves) require to be supported.

3.2.12 The distance between a support and the last nozzle shall be as short as possible and shall not exceed:

- 0.1m for pipe with a diameter ≤ DN25,
- 0.25m for pipe with a diameter >DN25.

3.3 Selector valves

3.3.1 Selector valves shall be located outside the danger zone resulting from a fire in the flooding zone. No flammables shall be stored in the immediate vicinity of a selector valve.

3.3.2 Selector valves shall be arranged so that they will not open when subjected to:

- operating environmental vibration
- vibration that arises when the valve at the supply container
- or other selector valves opening.

3.3.3 Automatic actuation of a selector valve shall be powered by static weight and/or pneumatic and/or electrical means. The unit shall be designed in such a way that checking for proper functioning on site can be achieved without discharging gas.

3.3.4 If it is possible to release the extinguishant, even though the mechanism used to automatically open the selector valve has failed, the emergency release mechanism shall not circumvent

- national codes for personnel safety
- the equipment required to prevent damage from excess pressure being exerted by the gas being discharged into the flooding zone.

3.3.5 Selector valves shall open automatically and simultaneously with the opening of a container valve.

3.3.6 Pressure relief devices shall discharge gas into the atmosphere away from windows,

especially in basements, ventilation openings, etc. In no case shall this constitute a hazard to personnel.

Safety valves must be assembled vertically.

3.4 Nozzles

3.4.1 Nozzles shall be arranged so that a homogenous mixture of the required gas concentration will be achieved. The maximum protected area per nozzle shall not exceed $30m^2$.

3.4.2 Nozzles shall be sited so as not to disperse combustible materials when gas is discharged, as this may contribute to the fire hazard.

3.4.3 Nozzles shall be arranged so that the effects of discharge do not damage the components being protected.

3.4.4 Nozzles shall be located in the upper area of a flooding zone. If the flooding zone is higher than 5m, special care shall be taken to get an even distribution of gas, e.g. by installing nozzles at intermediate levels.

3.4.5 Suitable protective arrangements shall be made in environments where nozzles could be fouled. This protective concept shall be approved by the authority responsible and executed in such a way that it will not adversely affect the discharge of the gas.

In rooms with electrical and electronic risks the nozzles have to be out of corrosion resistant materials.

4 DETECTION

In case of electrical triggering of the gas extinguishing system detection has to result from a fire detection system. The CEA regulations for fire detection systems have to be met.

4.1 Type of detectors

Fire detectors shall be either in accordance with the appropriate part of EN54 or in accordance with the CEA Specifications for detection devices.

Fire detectors may be:

- mechanical detectors (e.g. fusible link detectors)
- pneumatic detectors (e.g. thermal detectors)
- Electrical detectors (e.g. temperature sensing rod)
- Detectors according to EN 54-7

4.2 Criteria of selection of detectors

In order to determine the most appropriate form of detection for a particular risk the following points should be considered:

> The fire development and detected fire phenomena characteristics in the initial stage,
> room height,
> environmental conditions,
> possibility of false alarms in the protected rooms.

For IT-rooms and electric switching and distribution devices applies:
Only automatic fire detection systems shall be used for triggering according to CEA specifications for fire detection systems.

Fire development

Smoke detectors are preferred when smouldering combustion occurs giving off large amounts of smoke with minimal heat and radiation, e.g. cable fires.

Smoke, heat, ultra-violet or infra-red fire detection devices or combinations of different types of device could be used when combustion causes a rapid fire increase in the initial phase, i.e. high heat output and strong radiation.

If the stored goods are vulnerable to smoke damage, smoke detectors shall be used.

Room height

The response time of fire detection devices is increased with increasing room height. Care shall be taken in case of high rooms.

The height of ceiling areas smaller than 10% of the complete ceiling area and smaller than the protection zone of one detector shall not be taken into account but shall be considered as one room.

Environmental temperature

Smoke, ultra-violet and infra-red detectors can be used up to an ambient temperature of 50°C, if not excluded by type approval.

The response temperature of the heat detectors should be approximately 30°C above ambient temperature.

Heat responding devices incorporating a differential element should not be used when the normal ambient temperature fluctuates.

Fire detection devices can be used down to an ambient temperature of –20°C, provided there is no danger of ice forming and their use is not excluded by type approval.

Air movement

Smoke detectors can be used up to air speeds of 5m/s or higher if permitted by type approval.

Vibration

Vibration of fire detection devices mounted on machinery shall be taken into account.

Explosive atmospheres

Where an explosive atmosphere exists, electrical systems may be unsuitable, due to the potential ignition risk.

Humidity

Condensation shall not affect the response characteristics of a detection device or cause false alarms.

False alarms

False alarms caused by environmental influences, i.e. sunlight, heating etc., or mechanical damage, shall be avoided by the appropriate location of the fire detector.

Heat detectors shall not be exposed to solar irradiation. All installations emitting

heat, hot air or hot steams shall be taken into account.

Smoke detectors shall be configured in ”coincidence-connection”. In low rooms with strong air movement smoke detectors shall be protected by screening plates. Smoke detectors shall not be used in areas where aerosol-concentrations may trigger the detector.

Smoke, dust and other aerosols

Smoke detectors can give false alarms due to extraneous smoke, dust and other aerosols. Smoke detectors shall, therefore, only be used where the risk of false alarms is minimal. In the case of dust, approved special filters or other measurements can be used.

Optical radiation

Modulated radiation from sunlight or lighting devices can cause the false alarm of an ultra-violet or infra-red detector. This fact shall be taken in account in the location of such detectors.

4.3 Electrical fire detection systems

If smoke detectors are to be used to initiate gas discharge then they should be configured in "coincidence connection". This configuration requires that at least two independent detector alarm outputs are signalled to the detection control and indicating equipment, before discharge is initiated.

The area coverage of detectors should be at least one detector per 25m^2 of floor area, when coincidence connection is used, otherwise the system should be in accordance with the CEA fire detection specifications.

For IT-rooms and electric switching and distribution devices applies: IT-rooms, cable floors and false ceilings shall be separate fire detection zones.

4.4 Mechanical and pneumatic detection systems

4.4.1 Number and installation of mechanic or pneumatic detectors depend on the type, the room geometry (e.g. area, height, form of ceiling/roof) and environmental requirements in the protected area. Detectors shall be positioned to avoid false alarms.

The CEA specifications for fire detection systems shall be used in analogy.

4.4.2 There shall be at least one detector in any protection area.

The maximum protection area of each detector shall not exceed 30 m².

4.4.3 The distance between the detectors shall not exceed 6 m, the distance between a detector and the wall shall not exceed 3 m. The distance to the ceiling shall not exceed 0.3 m.

The horizontal and vertical distance to installations or storage shall not fall short of 0.3 m (exceptional rack storage).

In case of roofs (inclination > 20°) some detectors shall be installed nearby the highest part of the room.

In case of shed-roofs in every shed detectors shall be installed. The detectors shall be installed in the roof area showing the lower slope.

The fire detectors shall not be installed in the air entry of ventilation systems. If

perforate ceilings are use for ventilation they shall be closed within a radius around the detector of 0.5 m.

4.4.4 Where the detectors are installed in a ceiling that is divided by compartments the downstand beams shall be considered depending on the room height (see figure 4.1). If according to figure 4.1 the downstand beams shall be considered and if the compartment bounded by the downstand beams is ≥ 0.6 times of the allowed detection area (A_{max}), every compartment shall have at least one detector. If the compartments are < 0.6 times of A_{max} see table 4.1. Where the compartments are > A_{max} the compartments shall be treated as separate rooms (see appendix A5). If the height of the downstand beams is more than 1000mm one detector shall be installed in every compartment.

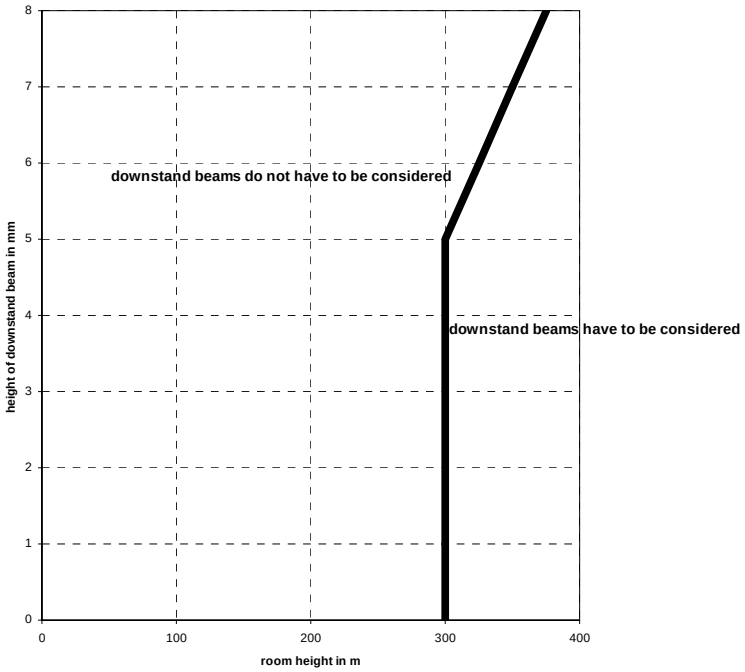

Figure 4.1 Considering of downstand beams

Max. detection area A_{max}	**Size of compartment in m²**	**Installation of one detector in every**
30 m²	> 18	Compartment
	12 – 18	2. compartment
	9 – 12	3. compartment
	6 – 9	4. compartment
	< 6	5. compartment
Table 4.1 number of detectors depending on the size of compartments		

4.4.5 Fusible link linkage shall have a device for rope stopping.

4.4.6 Baffles for heat detectors shall have a radius of 0.5 m or a edge length of 1 m.

5 CONTROL AND TRIGGERING

In addition to the following requirements EN12094-1 and national requirements for triggering of extinguishing systems and national guidelines for personnel safety shall be met.

5.1 Delay device

5.1.1 The discharge of gas shall be delayed for at least 10 seconds after triggering the installation, in order to warn people in the flooding zone. People shall be able to leave the zone without haste.

5.1.2 If the criteria specified in clause 1.5.3 are such that personnel could be endangered, it shall be ensured that gas can only be discharged into the flooding zone if the pre-warning time has elapsed.

Account shall be taken of fault or break down of one or more electrical or electronic components caused, for example, by an overload, or any other faults, resulting in premature release of agent.

Note: This can be fulfilled e.g. by a non-electrical delay device. The installer and the user shall take care about the approval of the component for this installation.

The national requirements concerning delay devices shall be met.

5.1.3 The pre-warning time shall not be longer than necessary to ensure safe evacuation. If the pre-warning time exceeds 30 seconds, the complete fire protection measures need to be reconsidered by the authority responsible.

5.2 Manual triggering device

5.2.1 The gas installation shall be equipped with a manual triggering device.

Manual triggering devices should be located outside flooding zones, close to exits.

5.2.2 Manual triggering devices shall be installed at normal operating height, at clearly visible locations and shall be protected against being tripped accidentally. Each device shall be marked to indicate the zone it serves.

In no case shall such devices conflict with the requirements for life safety (pre-warning and delay devices).

5.3 Emergency triggering device

Where a manual emergency triggering device is used it shall be located near the gas supply container(s) and shall be protected against being tripped accidentally. Each device shall be marked to indicate the zone it serves.

In no case shall such devices conflict with the requirements for life safety (pre-warning and delay devices).

5.4 Disable device

5.4.1 Mechanical measures shall be provided to lock-off gas release.

5.4.2 A visual fault indication shall be provided at a continuously manned location or at another clearly visible position whenever the gas supply is locked off.

5.4.3 National regulations of non-electrical disable devices and their use shall be considered.

In multiple-zone systems a non-electrical disable device shall be provided for each

individual flooding zone.

A non-electrical disable device shall not disable the fire detection and alarm functions.

5.5 Alarm devices

5.5.1 The gas installation shall be equipped with at least one alarm device.

In the event that the design criteria in clause 1.5.3 is such that personnel could be endangered, there shall be two completely independent alarm devices, e.g. a pneumatic alarm device powered or triggered by the same source as the delay device and a monitored electrical alarm device, e.g. 24V.

National regulations on alarm devices and their use shall be considered.

5.5.2 An alarm shall be sounded upon triggering.

5.5.3 Audible alarms should be augmented with visual alarm indications.

5.5.4 At the latest by the start of the gas release, there shall be a visual indication at the access points to the flooded zone.

5.5.5 When the installation is triggered, an alarm signal shall be transmitted to a location that is continuously manned. Wherever possible, the signals shall also be transmitted to the fire brigade or another alarm receiving centre.

5.6 Wiring

5.6.1 The installation shall comply with national codes, the CEA fire detection specifications and the following requirements.

5.6.2 The relevant standards for wiring shall be considered. The cables shall be protected against operational damages.
The cables shall pass only through flooding zones.
The cables shall be protected and routed so as to keep damage to an absolute minimum in the event of fire. The use of cable which is able to function for 30 minutes in case of fire (e.g. according to DIN 4102 part 12) is advisable, especially for those cables which are used for triggering of control- and alarm devices.

5.7 Control lines

5.7.1 Pneumatic control lines shall be made of galvanised steel, copper or equivalent corrosion resistant metal. Flexible pipes or hoses etc., shall only be used where fixed pipes are unsuitable.

The strength shall be sufficient for the type of triggering devices used.

5.7.2 Pipework shall be arranged so that it cannot be damaged by its own weight, temperature fluctuations, vibration, release of gas or other installation inherent influences. The maximum distance between two supports shall not exceed 2m for steel pipe and 1m for copper pipe.

All pipework shall be accessible.

5.8 Control container

If control containers are used for storage, they shall meet the requirements according to clause 2.6.

Control containers shall have a minimum content of 500 g. The content of the control containers shall be monitored. A loss of more than 10 % shall be reported automatically.

5.9 Triggering of ancillary equipment

Ventilation shall be turned off, if the gas concentration shall be maintained for any length of time.

If operationally possible the response of the detectors or the triggering of the manual triggering device shall automatically turn off the ventilation. Operating resource have to be turned off, too.

Functional testing must be possible every time. If operating resource can not be turned off during operation the gas extinguishing system shall have an operating device (preferable a key switch) turning off the operating resource. The operating status has to be marked on a separate display and a location that is continuously manned.

Only authorised persons shall be able to turn off the resource.

5.10 Power supply of electrical installations

For power supply two energy sources are necessary. One energy source shall be the electrical network working without interruption. The other energy source shall be a battery taking power supply automatically and without delay. The energy sources shall be connected with the fire detection and triggering device by a fix connection.

5.10.1 Electrical network

5.10.1.1 Power supply from electrical network shall guarantee the non-limited operation of the system and the detection device. The power supply from network shall during normal operation deliver the charging current for the battery.

5.10.1.2 A separate electrical circuit with a special marked fuse shall be used for power supply. Previous to the fuse there shall be once only fused up to the low-voltage-lateral point of delivery of the electrical network (place of energy input into the building). The electrical circuit of the system must not be interrupted by turning-off of operating resource.

5.10.1.3 The charging set shall be able to charge the discharged battery within maximum 24 hours automatically reaching 80 % of design capacity. Charging must be finished within 72 hours.

5.10.2 Capacity of battery

5.10.2.1 The capacity of systems with automatic fault report to a location that is not continuously manned shall ensure the unrestricted power supply within at least 72 hours, when mains supply is disturbed. After 72 hours all necessary alarm devices for the flooding zone facing the biggest demand of alarm power shall work at least 30 minutes.

5.10.2.2 The capacity for systems with automatic fault report to a location that is continuously manned shall ensure the unrestricted power supply within at least 30 hours, when mains supply is disturbed and if a suitable failure service is within reach all the time. After 30 hours all necessary alarm devices for the flooding zone facing the biggest demand of alarm power shall work at least 30 minutes.

5.10.2.3 The capacity for systems with automatic fault report to a location that is continuously manned shall ensure the unrestricted power supply within at least 4 hours, when mains supply is disturbed and if a suitable failure service is available all the time.

After 4 hours all necessary alarm devices for the flooding zone facing the biggest demand of alarm power shall work at least 30 minutes. An external auxiliary power supply shall be available and immediately useable. The auxiliary power supply shall deliver power for at least 30 hours.

6 INSTALLATION AND TESTING

6.1 Installation

6.1.1 The components of a gas system shall be installed in such a way that it is possible to inspect them at any time and without undue difficulty.

Components shall be installed such that mechanical and chemical damage etc. is minimised in the event of a fire.

Fire detectors shall be installed in such a way that they are suitably protected from airborne contaminants.

6.1.2 It is advisable not to route pipework and cables through unprotected zones. If this is not possible, pipework shall, in all cases, be installed and protected in such a way that damage in the event of fire is kept to a minimum.

6.1.3 The inside of pipes shall be cleaned prior to mounting. Pipework shall be carefully purged pneumatically after installation and before fitting nozzles. The purging shall be documented in writing.

6.1.4 Gas extinguishing systems with pneumatic control device shall have a fixed and self-closing test installation in order to connect test equipment to prove all control functions. The test equipment shall be composed of a coupling counterpart to the test installation, a tube, a manometer, a relief device and a test container with a shut-off valve. The relief of pilot piping shall be possible in a little while. The filling quantity of the test container shall enable the systems to be triggered five times considering an alarm time of one minute for pneumatic alarm means. The test container shall not have an immersion tube. Tools for functional testing of the extinguishing system shall be available.

6.1.5 Pneumatically triggered inert gas extinguishing systems where personnel may be endangered (i.e. more than 5 Vol% carbon dioxide resp. less than 10 Vol% oxygen in the labour or traffic area) shall be designed in such a way that gas due to leakage of the control valves shall not trigger prematurely or without alarm.

6.2 Testing

6.2.1 Pipework which is closed shall be hydrostatically proof-pressure tested to the value indicated in clause 6.2.2.

6.2.2 Pipework should be subjected to 1.5 times the service pressure for a period of 30 to 40 minutes. Not more than 5% loss of pressure shall take place within this period. The equipment and pipework shall be carefully emptied and dried after proof testing.

A visual inspection will be sufficient for pipework downstream of selector valves. Special attention shall be paid to the correct assembly of threaded connections, bolts and flange bolts.

6.2.3 If pipework cannot be subjected to hydrostatic pressure testing, then welded connections can be inspected with the assistance of other methods, e.g. penetration dye inspection, magnetic techniques, x-rays etc.

In case of flange bolts or equivalent approved systems, the hydrostatic pressure testing on site may be replaced with a hydrostatic pressure testing of components or pipe segments considering a test pressure according to table 3.1. In these cases, a

leakage test with gas (p_{abs} = 3 bar) shall be conducted after installation.

6.2.4 Every extinguishing agent container shall be tested for correct filling by weighing and testing by means of a manometer (considering the correction of temperature) before installation. The test shall be included in the quality management system of the installer and documented on a label on each container.

7 USE OF THE INSTALLATION

7.1 Instruction and training of personnel

7.1.1 At least two responsible supervisors shall be trained in the use of the system. They shall be responsible for compliance with the directions for use and maintenance and with the legal regulations. They shall be introduced by the installer.

Personnel who work inside a flooding zone or in adjacent zones shall be thoroughly instructed and trained by a supervisor as to the actions to be taken before, during and after gas is released.

7.1.2 Personnel assigned to carry out repair or other work, but who are not generally assigned a work site inside the flooding zone, shall commence such work only after having received written permission (date, time and duration) to do so by the supervisor responsible. Such personnel shall also be given training as described in clause 7.1.1.

7.2 Inspection

7.2.1 Regular inspections shall be carried out to ensure that the system will function properly.

The frequency and type of inspections will depend on the nature of the installation, national legislation and environment etc.

7.2.2 Inspections shall be made by personnel specially designated for this work, thoroughly instructed in their duties, with a comprehensive knowledge of the installation.

Daily, weekly and monthly inspections shall be carried out according to the manufacturer's specifications.

7.2.3 Daily inspection

> check all installation indications visually.

7.2.4 Weekly inspection

> check fire detection system,

> check quantity of gas, replacing or topping-up if a loss of weight or pressure in excess of 10% has occurred,

> check operational position of valves,

> check power supplies.

7.2.5 Monthly inspection

> check equipment used to actuate fire doors and hatches and power supplies etc.,

> check audible and visual alarm devices,

> check delay device,

> check nozzles (visual test),

> check enclosure (visual test),

> check ancillary equipment.

7.3 Log book

A log book shall be maintained in which the following entries are to be made:

> results of any inspection,

> maintenance and repair work undertaken, e.g. reason, nature etc.,

> Any other event that affects the installation, e.g. fires, unintentional release, deactivation, faults etc.

7.4 Other obligations

7.4.1 If any changes are made which could have an adverse influence on the effectiveness of the installation (characteristics of fire risk, enclosure, ventilation etc.), the Insurer shall be informed and the installation modified as appropriate.

Any change or extension of the extinguishing system shall be performed by an installer approved for the system concerned.

7.4.2 If the installation is not functional for more than 24 hours, this shall be reported to the Insurer and/or other authority, as appropriate.

Other fire prevention measures should be carried out immediately.

After any release of the extinguishing system, it shall be controlled and commissioned by the approved installer of this system.

8 MAINTENANCE

To ensure the continued availability of the installation in accordance with the approval, regular maintenance, including periodical inspections, shall be carried out.

Maintenance work shall be conducted in such a manner as to keep the shut-down period to a minimum, both in time and extent. In multizone installations, the zones can be shut down sequentially so as to disable only a small part of the installation at any one time.

Repair work shall start as soon as possible but within 24 hours of any fault being detected.

Maintenance shall be carried out at least once a year. An approved installer, preferably the company that originally installed the system, shall carry out the maintenance. The installation company shall be approved for the systems to maintain.

9 DOCUMENTATION

The installer shall submit technical documentation, which shall give sufficient information to be able to estimate the hazards and the effectiveness of the gas fire extinguishing system as follows:

- name of the owner and location of the risk,
- drawings of the protected area on a scale not smaller than 1:100,
- protected risk,
- type, arrangement, direction, surface coverage and performance characteristics of the nozzles,
- type and location of the fire detection, manual and emergency triggering devices,
- internal diameter and length of pipework (internal diameter, as an alternative thickness, nominal width),
- pressure drop data for valves and fittings,
- calculation of the required gas supply quantity,
- hydraulic calculations including appropriate isometric drawings etc,
- location and size of the gas storage area (including filling pressure),
- other information which is necessary for evaluation of the risk and the installation, e.g. pressure test certificate,
- inspection and maintenance instructions,
- possible danger to the neighbourhood or danger from the neighbourhood.

10 APPROVALS

10.1.1 An approval inspection shall be carried out by an inspector accepted by the Insurers to check that the installation is in accordance with this specification.

Before approval inspection, the installer shall submit a certificate of installation to the authority.
The installation should be declared to the authority if possible 4 weeks, at least 2 weeks before beginning by submitting the certificate of installation.

10.1.2 The gas system shall have been designed, installed and maintained in accordance with these rules by an approved installer.

The approval of the installer shall be given by a certification body accepted by the Insurers according to the appropriate CEA specifications.

10.1.3 The system shall comprise only components approved by an accredited certification body accepted by the Insurers. The appropriate compatibility of the components shall be certified by a system approval, see list of components in Appendix A3.

10.1.4 A full discharge test shall be carried out to check that the installation complies with this specification, unless it is possible to use another procedure. The development of gas concentration shall be continuously recorded. The time period, during which the measured concentration value is recorded and logged, shall be not less than ten minutes, or the required holding time, commencing from the time at which the installation was actuated.

Instead of recording the inert gas concentration the oxygen concentration can be recorded.

During full discharge test the following values shall be taken:

- Duration of flooding
- Automatic measurement and record of the concentration of the extinguishing agent or the concentration of oxygen.
  Testing points shall be situated at least on the floor and beyond the ceiling (10 % and 90 % of room height). Values shall be recorded in cases, where several zones communicate (e.g. cable floors, or in false ceiling spaces, or in areas with possible delayed build-up of concentration or fastened reduction of concentration e.g. unfavourable room situation, installations)

Every room shall be tested separately, if several zones shall be protected.

Testing shall be performed under designed conditions of the system, but without fire.

Flooding tests and measurements shall be performed by the authority.

10.1.5 During approval inspection at least functional tests of the system for each protected zone and a partial flooding test for each protected zone shall be performed.

In case of a partial flooding test (flooding with a subset of the extinguishing agent quantity) it must be certifiable, that all nozzles are admitted with gas. Instead of extinguishing agent a surrogate gas (e.g. coloured gas) can be used.

For systems in explosive atmospheres see clause 10.1.7.

10.1.6 According to clause 2.2.1 a full discharge test as described in clause 10.1.4 or equivalent, e.g. fan test, shall be carried out if the value of the "surface term" is reduced ($k < 0.27$m).

If the quantity is designed according to clause 2.2.1 without reduction of "surface term" (factor $k \geq 0.27$ m), a visual control of integrity of the exterior walls of the flooding zone is sufficient.

Note: Taking the "surface term" into account in case of quantity design results in higher safety potential. Nevertheless it is not guaranteed that leakage loss, which affects the holding time, is compensated.

10.1.7 If an explosive atmosphere prevails the earthing of the system shall be proved before functional test. The existence of explosive atmosphere in the flooding zone shall be proved and excluded with suitable test equipment. The owner of the system shall issue the functional test.

If the flooding is not possible due to danger of explosion, the reasons shall be noticed in the certificate of installation of the installer.

10.1.8 The installation and protected risk shall be inspected at least once a year by the authority. On each inspection a functional test of the system shall be performed.

Both, in case of relevant changes of the exterior walls and at least every second year the tightness of the exterior walls of the flooding zone shall be controlled, e.g. by means of a door-fan test[10].

If the quantity is calculated according to clause 2.2.1 without reduction of the "surface term" (factor $k \geq 0.27$) a visible observation is sufficient.

Note: Considering the "surface term" in course of the quantity calculation will lead to a higher security potential. Nevertheless loss due to leakage affecting the holding

[10] Door-fan tests shall be performed by approved companies (approval for door-fan tests) except the first approval inspection and every third test, which has to be performed by the authority.

time is possible.

After every periodic test, a testing report with a list of deficiencies shall be made.

11 Monitoring of gas extinguishing systems

11.1 General

Inert gas extinguishing systems shall be automatically monitored for their availability in the case of:

- systems with more than 500 m^3 of protected volume,
- systems with more than 250 m^3 of protected volume where a delay time is required for life safety aspects, [11]

The following components shall be monitored continuously for their availability and faults (i.e. cases of non-availability) shall be automatically indicated. Their failing or a wrong operating position can prevent the emission of the (correct amount of) extinguishing medium or the functioning of the alarm and delay device in case of triggering, or it can cause an emission into a not-triggered extinguishing zone.
Testing of the monitoring system shall always be possible.
The monitoring system shall not effect the correct function of the gas extinguishing system.

11.2 Disable and triggering devices and selector valves

The correct operating position of the following components shall be monitored:

- Non-electrical control devices
- Disable devices
- Selector valves
- Switch devices for main/ reserve supply container
- In the case of mechanical control using wire cables: the position of the triggering device

11.3 Agent quantity measurement

The quantity of available extinguishant and pilot gas shall be monitored. Any loss of more than 10 % of the content of any container shall be indicated.

- all containers of the main supply and of the reserve supply permanently connected to the pipe system
- containers for the supply of the alarm devices and /or pilot containers

11.4 Electrical lines

Electrical lines transmitting alarm and fault signals or signals for the monitoring and control of the installation and alarm devices (monitored first alarm with two independent energy supplies) shall be monitored for line break, short circuit and earth fault. The CEA specifications for fire detection installations shall be taken into account.

Necessary additional controlling signals (e.g. shut-off of ventilation systems, closing of openings of the enclosure) may be transmitted by non-monitored lines.

11.5 Electrically operated components

The power supply of electrically-operated components of the extinguishing installation shall be monitored for normal condition and power failure as far as they cannot be monitored by the fire detection installation.

11.6 Monitoring and control lines

11.6.1 Monitoring lines

11There may be aspects of value of the protected risks like consequential losses which needs to be considered.

Each monitoring device shall have a separate indicator. A maximum of 60 monitoring devices may be connected to one detection line.

11.6.2 Monitoring lines of disable devices

Faults of the disable device shall be indicated if the disable device is in a position that is neither the ready-for service-position (open) nor the blocking position (closed), see 11.2. Independent from that, the actuation of the disable device shall be transmitted and indicated separately.
The disabled condition of the system shall not cause a general fault indication but the disabled condition of the system shall be indicated separately for each flooding zone.

11.6.3 Control lines

All electrically controlled components for the release of the installation, operation of selector valves, delay devices and alarm devices shall be connected to lines monitored for line break, short circuit and earth fault.
The devices shall be attached to the control lines so that in the case of a fault indication an unequivocal and quick identification of the components of the installation causing this fault indication is possible.

This is relevant for:

- Triggering devices of pilot containers, container batteries, isolating valves and selector valves,
- electromagnetic locking devices for triggering devices and/or selector valves and
- solenoid valves for controlling the emergency-stop device and / or secondary flooding function.

11.7 Storage area

The storage area shall be monitored for the allowable maximum and minimum ambient temperature where a dedicated heating or cooling system is installed.

11.8 Fault indication

11.8.1 Indication and transmission

Faults of the extinguishing installation shall be indicated visually and audibly at a location of the premises, which is continuously manned. It shall be possible to switch off the audible signal, but the visual signal shall only be switched off if the fault is removed. If the plant does not dispose of a continuously manned location, the fault indication shall be transmitted automatically to an employee of the plant (e.g. by the help of a telephone transmitter).

11.8.2 Further indications

The fault indication of the following shall be indicated separately:

- monitoring system of the gas extinguishing system
- other monitoring systems
- fire detection system
- control devices.

Faults of the extinguishing installation and faults of the monitoring installation shall be indicated separately.

As long as a fire detection signal of the extinguishing installation is present, no fault detection shall be indicated at the monitoring control panel or at the monitoring insertion of the c.i.e. of the fire detection installation.

11.9 Power supply of the monitoring installation

The power supply of the monitoring installation shall be installed according to the CEA

specifications for fire detection installations.

11.10 Requirements for components of the monitoring installation

11.10.1 Protection class

The components of the monitoring installation shall fulfil at least the protection class IP 54 (IEC 529 - Degrees of protection provided by enclosures - IP code).

11.10.2 Switching way

In case of valves, the fault indications shall depend on the switching way of the component under monitoring. The switching way is the way from the just still closed to the totally opened position of the valve.

11.10.3 Switching way of normally open devices

The fault indication for valves which are situated in the extinguishant flow and in the pneumatic pilot lines, and the fault indication for other blocking devices which are continuously opened when the extinguishing installation is ready for service, shall be activated at the latest, when the components are closed 20% of the switching way.

11.10.4 Switching way of normally closed devices

In case of valves in the extinguishant flow and in case of valves which are not situated directly in the extinguishant flow and which are closed when the extinguishing installation is ready for service, the fault indication shall be activated immediately when the opening procedure starts.

11.10.5 Blocking devices of alarm devices, pressure or pneumatic switches

In case of blocking devices of alarm devices and pressure or pneumatic switches, the fault indication shall be effective already in intermediate positions.

11.10.6 Non-electrical control devices

Non-electrical control devices shall be monitored. The requirement is fulfilled if the room with the non-electrical control device is only accessible to authorised persons and if opening the door causes a fault indication.

Components may not be monitored if they are automatically reset into their operating position by the triggering energy of the installation itself.

Appendix A1 Physical properties of the extinguishant

Some important properties of inert gases are shown as follows:

A.1.1 purity requests

Purity requests are

Argon	Ar O_2 H_2O CO CO_2	> 99.9 % gas/100 < 400 ppm < 20 ppm < 1 ppm < 10 ppm
Carbon dioxide	CO_2 O_2 H_2O CO	> 99.5 % gas/100 < 0.1 % gas/100 < 10 ppm < 50 ppm
Nitrogen	N_2 O_2 H_2O CO CO_2	> 99.9 % gas/100 < 400 ppm < 20 ppm < 1 ppm < 10 ppm

IG541: this guideline applies to the following mixture in the container:

N_2 Ar CO_2	48.8 Vol% to 55.2 Vol% 37.2 Vol% to 42.8 Vol% 7.6 Vol% to 8.4 Vol%

IG55: this guideline applies to the following mixture in the container:

N_2 Ar	45.0 Vol% to 55.0 Vol% 45.0 Vol% to 55.0 Vol%

This guideline is not valid for other mixtures.

Gas shall be pre-mixed, in every container the mixture shall be equal.

A.1.2 Physical properties

Quantity	Argon	IG541	Nitrogen	IG55
Mol mass	39.9 g/mol	34.0 g/mol	28.0 g/mol	34.0 g/mol
Density at 1.013 bar and 20 °C	1.662 kg/m³	1.418 kg/m³	1.165 kg/m³	1.413 kg/ m³

Appendix A2 Block diagram for an inert gas system

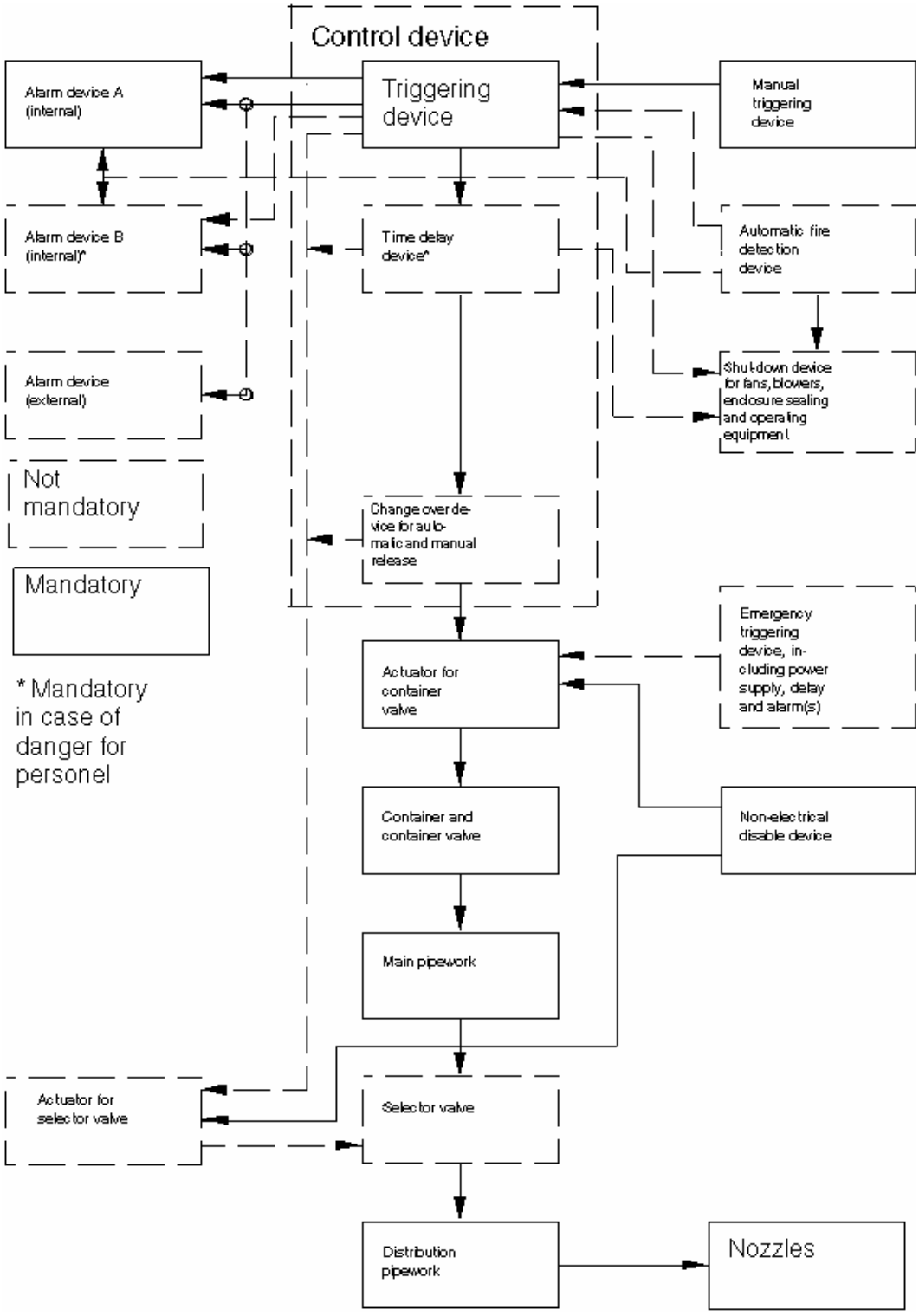

Appendix A3 Components, systems, calculation methods

A3.1 Components

The following listed components shall be approved:

1 Automatic control devices
   a) electrical control
   b) non-electrical control

2 Manual control devices

3 Non-electrical delay devices

4 Container valves, assemblies and actuators

5 Selector valves and their actuators

6 Non-electrical disable devices

7 Nozzles

8 Hoses and container connecting pipes

9 Fire detection devices

10 Pressure switches and switch type pressure gauges

11 Weighing devices

12 Alarm devices

13 Check valves

14 Safety devices

15 Pipe hangers (if not according with this rules)

16 Pressure gauges (e.g. manometer)

17 Emergency triggering devices

18 automatic drainage points

19 Device of adding of odour

20 Safety valves

21 Pressure reduction device

A3.2 System approval

Systems of gas extinguishing systems shall be approved. All components of gas extinguishing systems shall be approved.

A3.3 Calculation method

The calculation method of the design of the pipework shall be approved.

Appendix A4 Testing methods to determine the extinguishing concentration of flammable liquids and gases by means of "cup-burner"

A4.1 Principle

The test procedure for determining the inert gas extinguishing concentration is analogous to the method for determining the CO_2 concentration described in ISO 6183:1990 .

The cup-burner apparatus is used to determine flame extinguishing concentrations for liquids and gases.

The result given is the theoretical minimum inert gas concentration to extinguish the flame. The design concentration is calculated from this figure (see clause A4.5).

A4.2 Apparatus

The apparatus for these measurements is a cup-burner arranged as in Figure A.1.

A4.3 Test procedure for flammable liquids

A4.3.1 Place a flammable liquid sample in the fuel reservoir.

A4.3.2 Adjust the adjustable stand under the fuel reservoir to bring the fuel level in the cup to within 1 mm of the top of the cup.

A4.3.3 Adjust the electric control circuit to the cup heating element to bring the fuel temperature to 25 °C, or to 5 °C above the open cup flash point of the fuel, whichever is higher.

A4.3.4 Ignite the fuel by suitable means, preferably electrical, which shall not contaminate the fuel under test.

A4.3.5 Adjust the air flow rate to 40 l/min.

A4.3.6 Start the flow of the inert gas and increase it slowly until the flame is extinguished. Record the inert gas flow.

A4.3.7 Remove approximately 10 ml to 20 ml of fuel from the surface of the cup with a pipette.

A4.3.8 Repeat steps A4.3.4 through A4.3.6 and average the results.

A4.3.9 The flame extinguishing concentration C should be determined by means of a measuring instrument to measure the extinguishing gas permanently. The measuring instrument shall be calibrated for the concentration of the mixture of fire extinguishing agent and air.

Alternatively the oxygen concentration of the mixture of air and extinguishing agent below the cup should be measured by means of a permanent oxygen analysis installation. The extinguishing agent concentration shall be calculated as shown in the equitation:

$$C = 100\left(1 - \frac{O_2}{O_2(air)}\right)$$

C....	concentration of the extinguishing gas, in % gas/100
O_2...	concentration of oxygen, in % gas/100
O_2(air)....	concentration of oxygen in the air, in % gas/100

Alternatively calculate the flame extinguishing concentration, C, as a percentage, as shown in the equation.

$$C = \frac{V_F}{40 + V_F} \times 100$$

where V_F is the inert gas flow, in litres per minute.

A4.3.10 Increase the fuel temperature to 5 °C below the boiling point of the fuel, or to

200 °C, whichever is lower.

A4.3.11 Repeat steps A.3.2 and A4.3.4 through A4.3.9.

A4.3.12 Take the flame extinguishing concentration to be the higher value from the two fuel temperatures.

A4.4 Test procedure for flammable gases

A4.4.1 The apparatus is modified by filling the cup with glasswool and reinserting a rotameter calibrated for the fuel in place of the fuel reservoir of Figure A.1. The rotameter is connected to a source of fuel through an appropriate pressure regulator.

A4.4.2 Adjust the fuel flow to produce a linear velocity within the cup of 130 mm/s.

A4.4.3 Perform steps A4.3.3 through A4.3.9.

A4.4.4 Increase the fuel temperature to 150 °C.

A4.4.5 Repeat steps A4.3.4 through A4.3.9.

A4.4.6 Take the flame extinguishing concentration to be the higher value from the two fuel temperatures.

A4.4.7 If the concentration requirement at the higher temperature exceeds that at the lower temperature by a significant amount, the fuel shall be classified as "temperature-sensitive". The flame extinguishing concentration for temperature-sensitive fuels shall be determined at the maximum temperature existing in the specific protected area.

A4. 5 Design concentration calculation

Take the design concentration to be the value of the flame extinguishing concentration multiplied by 1.3 scaling factor (see clause 2.3.2).

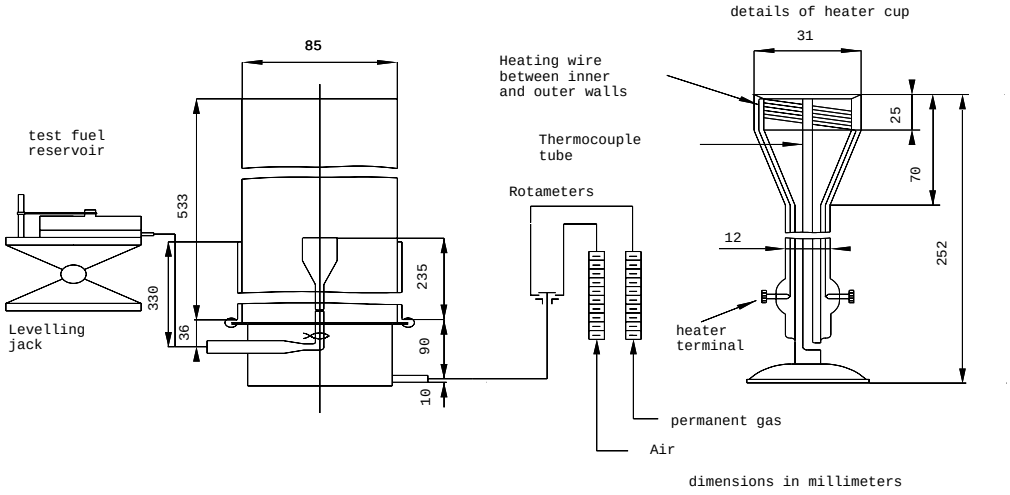

Figure A.1 - Cup burner apparatus

Appendix A5 Structural construction of the enclosure

	Scope	Protected zone	Requirement	Fulfilled by
1	Buildings or parts of buildings and their contents shall be protected from fires inside and outside	Complete building or part, excluding permissible exceptions (see explanation to A2)	Enclosure shall be gas tight* and ensure protection from fires in the neighbourhood	Structural or space separation
2	The contents of a room shall be protected from fires inside and outside	Room	Enclosure (walls, floor and ceiling) shall be gas tight* and ensure protection from fires in the neighbourhood	90 min fire separation according to national rules, if adjoining rooms are not protected by approved extinguishing installations
3	The contents of a room shall be protected from fires inside	Room	Enclosure (walls, floor and ceiling) shall be gas tight*	30 min fire separation according to national rules, or non-combustible material
4	A closed object shall be protected from fires inside	Closed object	Enclosure (walls, floor and ceiling) shall be gas tight*	30 min fire separation according to national rules, or non-combustible material

*see clause 2.1.2

The enclosure shall **always** be sufficient tight until the end of the holding time, that means the structural separation has to fulfil - in addition to the fire resistance requirements – the requirement of a sufficient gas tightness until end of holding time taking into account the possible (e.g. thermal) stresses. Common leakage (e.g. window or door cracks) are tolerable.

Table A5.1: protection objective of a gas extinguishing system and structural requirements.

A 5.1 Explanation to table A5.1

Table A5.1 shows in table form the relationship between the scope of a inert gas installation and the structural requirements. The underlying principle is based on those matters which have to be considered also for the development of a protection concept.

Regarding structural separation national regulations shall be met.

A 5.2 Example: The contents (material value) of a room shall not suffer a total loss.

risk from inside	risk from outside
Fire breaking inside	Fire breaking outside

Protection against risk from inside:

The protection target is fulfilled by means of a inert gas installation and the gas tightness of the room.

Protection against Risk from outside:

Measures as described above cannot guarantee the fulfilment of the protection target; structural measures are also necessary and shall be valued (assessed) as a function of the risk.

The table A5.1 details the minimum requirements and measures which shall be fulfilled at least. Additional requirements and measures will have to be adapted to the type of internal or external risk.

A 5.3 Permissible exceptions for protection aim 1

- Rooms that are protected by other approved extinguishing installations.
- Wet process rooms cut off by 90 min fire separations meeting national rules. The authorities shall be contacted.
- Lavatories constructed of non-combustible materials and with no combustible

storage inside. This exception does not apply to dressing rooms.

- Offices and flats with an maximum area of 150 m^2 cut off by 90 min rated fire walls meeting national rules.
- Staircases with 90 min rated walls that contain no combustible material.
- Lift wells cut off by 90 min rated fire walls.

Appendix A6 Calculation formula for pipework

A6. 1 The pressure drop along the pipe system

The pressure drop of a flowing inert gas along a pipe with the length z (from point 1 to point 2) is calculated in the following way:

$$\Delta p = \Delta p_D + \Delta p_S$$

with $$\Delta p_D = \lambda \cdot \frac{\overline{\rho}}{2} \cdot \overline{w}^2 \cdot \frac{z}{D} \text{ (dynamic)}$$

and $$\Delta p_s = \overline{\rho} \cdot g \cdot z \cdot \sin \gamma \text{ (static)}.$$

In general, the static pressure drop Δp_S can be neglected. Only in case of high pressure (150 to 200 bar) it is possible that the static pressure drop gives a recognisable share to the total pressure drop.

The friction coefficient λ is related to the velocity and to the substance values, which are corresponding to the mean state in the pipe section:

$$\overline{\rho} = \frac{\rho_1 + \rho_2}{2}, \quad \overline{p} = \frac{p_1 + p_2}{2},$$

$$\overline{w} = \frac{w_1 + w_2}{2}, \quad \overline{T} = \frac{T_1 + T_2}{2}.$$

If the change of density in a pipe section is higher than 10 %, this pipe section shall be subdivided into supplementary sections.

In case of neglecting the heat interchange with the pipe wall, chilling occurs because of the expansion. At the same time kinetic energy is changed into heat. According to the enthalpy balance, this change of temperature in the pipe section can be calculated from the velocity change:

$$\Delta T = T_1 - T_2 = \frac{w_2^2 - w_1^2}{2 \cdot \overline{c}_p}$$

with $\overline{c}_p = \frac{c_p(T_1) + c_p(T_2)}{2}$.

In case of higher density changes in the pipe section, the dynamic pressure drop Δp_D can also be presented as:

$$\Delta p_{D,\Delta\rho} = \lambda \cdot \frac{\rho_1}{2} \cdot w_1^2 \cdot \frac{z}{D} \cdot \frac{p_1}{\overline{p}} \cdot \frac{\overline{T}}{T_1}$$

This relation allows high density change as long as the mean substance values of the pipe section show nearly a linear behaviour.

A6. 2 Calculation of nozzles and restrictor plates

The Bernoulli equation for the pressure drop of a gas flowing through an opening device gives:

$$\Delta p = \lambda \cdot \frac{\overline{\rho}}{2} \cdot w_m^2$$

with: λ = friction coefficient

$\overline{\rho} = \frac{\rho_0 + \rho_1}{2} =$ averaged density (kg/m3)

$\rho 0$ = density upstream the opening

$\rho 1$ = density downstream the opening

w_m = velocity within the opening (m/s).

Together with the continuity equation

$$M^* = A_m \cdot \overline{\rho} \cdot w_m$$

with A_m = total cross-section of the opening (m²), the following equation can be concluded:

$$M^* = \frac{1}{\sqrt{\lambda}} \cdot A_m \cdot \sqrt{2 \cdot \overline{\rho} \cdot \Delta p}$$

The friction coefficient λ is directly related to a contraction of the cross-section due to the mass-inertia of the flowing medium (vena contracta).

This is represented by the definition

$$\mu = \frac{1}{\sqrt{\lambda}} .$$

In case of higher pressure drops, this contraction shall be corrected by an efflux-factor ψ that takes into account the compression-energy. For ideal gases this efflux-factor is given by

$$\psi = \sqrt{\frac{\kappa}{\kappa - 1}\left[\left(\frac{p_m}{p_0}\right)^{2/\kappa} - \left(\frac{p_m}{p_0}\right)^{\kappa+1/\kappa}\right]}$$

with: p_m = pressure within opening

p_0 = pressure in front of the opening

In the critical state of flowing, the pressure within the opening reaches

$$p_{m,\,critical} = p_0 \cdot \left(\frac{2}{\kappa + 1}\right)^{\kappa/\kappa-1}$$

The pressure drop at restrictor plates and nozzles often exceeds the critical pressure drop. In this case the equation for the mass-transport given above is not suitable to calculate the real pressure drop for a given flow rate.

In the critical state of flowing, the relation between mass transport and pressure can be described by the following equation:

$$M^* = \gamma \cdot A_m \cdot \rho_{critical} \cdot w_{critical} \quad .$$

In order to determine the coefficient γ the following ansatz has been chosen:

$$\gamma = e^{k_1} \cdot {p_0}^{k_2} \cdot {D_m}^{k_3} .$$

The velocity within the opening reaches the sound-velocity as soon as the pressure p_1 behind the opening is less than the critical pressure:

$$w_m = w_{critical} \qquad \text{if} \qquad p_1 \le p_{m,\,critical} .$$

The constants k_1 to k_3 are specific to the used fittings. These constants can be determined from laboratory measurements using a least square fit.

Index of symbols

A	:	area	m²
CP	:	specific heat	J/kg K
D	:	diameter	m
g	:	acceleration due to gravity	m/s²
M*	:	mass flow	kg/s
p	:	pressure	Pa
w	:	velocity	m/s
z	:	length	m
γ	:	horizontal angle	-
κ	:	isentrop-index	-

λ	:	friction coefficient	-
μ	:	viscosity	kg/ms
ρ	:	density	kg/m³
ψ	:	efflux-factor	-

Subscripts

D	:	dynamic
S	:	static
m	:	within the opening
0	:	upstream of the opening
1	:	downstream of the opening

Appendix A7 Pressure relief devices for the protected enclosure

A7.1 Equation for the calculation of the relief opening for over pressure

$$A = \frac{M_P^* \cdot v_P}{\sqrt{\Delta p \cdot v_{HOM}}} \cdot C_2$$

A7.2 Pressure drop through an opening

$$\Delta p = C_1 \cdot \frac{\rho_{HOM}}{2} \cdot w_{HOM}^2 \quad (1)$$

The resistance coefficient C_1 for openings is dependent on the geometry of the opening
and in most cases it is within the following range:
$0{,}5 < C_1 < 2{,}5$.

A7.3 Mass flow through an opening

$$M_{HOM}^* = V_{HOM}^* \cdot \rho_{HOM} \quad (2)$$

A7.4 Volume flow through an opening

$$V_{HOM}^* = A \cdot w_{HOM} \quad (3)$$

A7.5 Homogenous mixture density, homogenous specific volume

$$\frac{1}{\rho_{HOM}} = \frac{x_{air}}{\rho_{air}} + \frac{x_P}{\rho_P}$$

$$\rho_{HOM} = \varepsilon_{air} \cdot \rho_{air} + \varepsilon_P \cdot \rho_P$$

$$\frac{1}{\rho_{HOM}} = v_{HOM}$$

Assumption: The volume flow of the extinguishing gas V_P^* is equivalent to the relief volume flow V_{HOM}^*:

$$V_P^* = V_{HOM}^* \qquad V_P^* = \frac{M_P^*}{\rho_P}.$$

A7.6 Rearranging for calculating the surface of the relief opening:

(3) rearranged for A:

$$A = \frac{V_{HOM}^*}{w_{HOM}} \tag{4}$$

(2) rearranged for V_{HOM}^*:

$$V_{HOM}^* = \frac{M_{HOM}^*}{\rho_{HOM}} = \frac{M_P^*}{\rho_P} \tag{5}$$

(1) rearranged for w_{HOM}:

$$w_{HOM} = \sqrt{\frac{2 \cdot \Delta p}{C_1 \cdot \rho_{HOM}}} \tag{6}$$

(5) and (6) set into (4):

$$A = \frac{\frac{M_P^*}{\rho_P}}{\sqrt{\frac{2 \cdot \Delta p}{C_1 \cdot \rho_{HOM}}}} \tag{7}$$

Rearranging and simplifying of equation (7):

$$A = \frac{\frac{M_P^*}{\rho_P}}{\sqrt{\frac{2 \cdot \Delta p}{C_1 \cdot \rho_{HOM}}}} = \frac{M_P^* \cdot \sqrt{C_1 \cdot \rho_{HOM}}}{\rho_P \cdot \sqrt{2 \cdot \Delta p}}$$

With the coefficient C_2

$$C_2 = \sqrt{\frac{C_1}{2}}$$

the pressure relief surface is found to be

$$A = \frac{M_P^* \cdot \sqrt{\rho_{HOM}}}{\rho_P \cdot \sqrt{\Delta p}} \cdot C_2 = \frac{M_P^* \cdot v_P}{\sqrt{\Delta p \cdot v_{HOM}}} \cdot C_2 \ .$$

C_1 can be equated with 2 in case of openings with a high flow resistance (e.g. louvers that can move to an angle of 45°). This simplifies the formula, because then C_2 equates with 1.

The results achieved by this method are only valid for normal circumstances, with louvers closed openings in the wall to the outside, not leading the gas flow through ventilation ducts.

Index of symbols:

A	=	opening surface	m^2
M^*	=	mass flow	kg/s
Δp	=	allowable pressure increase in the enclosure	Pa
v	=	specific volume	m^3/kg
V^*	=	volume flow	m^3/s
w	=	flow velocity	m/s
x	=	mass fraction	≤ 1
ε	=	volume fraction	≤ 1
ρ	=	density	kg/m^3

Subscripts:

HOM	=	subscript for homogenous mixture
P	=	subscript for inert gas

Example

A total flooding installation brings inert gas with a maximum mass flow of 15 kg/s into a protected volume. The gas quantity was calculated for an extinguishing concentration of 47 % by volume. The enclosure is lightweight constructed and it can be exposed to a maximum over pressure of 100 Pa.

$$A = \frac{M_P^* \cdot v_P}{\sqrt{\Delta p \cdot v_{HOM}}}$$

with

$$M_P^* = 15\frac{kg}{s}$$

$$\Delta p_{max} = 100Pa$$

a) IG541

$v_{Inergen} = 0.706\frac{m^3}{kg}$ at 20 °C, 1013 mbar

$\rho_{inergen} = 1.417\frac{kg}{m^3}$ at 20 °C, 1013 mbar

$$\rho_{HOM} = \varepsilon_{air} \cdot \rho_{air} + \varepsilon_{inergen} \cdot \rho_{inergen}$$

$$\rho_{HOM} = (0.53 \cdot 1.204 + 0.47 \cdot 1.417)\frac{kg}{m^3} = 1.304\frac{kg}{m^3}$$

at 20 °C, 1013 mbar

$v_{HOM} = 0.767\frac{m^3}{kg}$ at 20 °C, 1013 mbar

it follows

$$A_{inergen} = \frac{15 \cdot 0.706}{\sqrt{100 \cdot 0.767}} m^2 = 1.209m^2 .$$

b)argon

$v_{argon} = 0.602\frac{m^3}{kg}$ at 20 °C, 1013 mbar

$\rho_{argon} = 1.662\frac{kg}{m^3}$ at 20 °C, 1013 mbar

$$\rho_{HOM} = \varepsilon_{air} \cdot \rho_{air} + \varepsilon_{argon} \cdot \rho_{argon}$$

$$\rho_{HOM} = (0.53 \cdot 1.204 + 0.47 \cdot 1.662)\frac{kg}{m^3} = 1.419\frac{kg}{m^3}$$

at 20 °C, 1013 mbar

$v_{HOM} = 0.705\frac{m^3}{kg}$ at 20 °C, 1013 mbar

it follows

$$A_{argon} = \frac{15 \cdot 0.602}{\sqrt{100 \cdot 0.705}} m^2 = 1.075m^2 .$$

c) nitrogen

$v_{nitrogen} = 0.858\frac{m^3}{kg}$ at 20 °C, 1013 mbar

$\rho_{nitrogen} = 1.165\frac{kg}{m^3}$ at 20 °C, 1013 mbar

$$\rho_{HOM} = \varepsilon_{air} \cdot \rho_{air} + \varepsilon_{nitrogen} \cdot \rho_{nitrogen}$$

$$\rho_{HOM} = (0.53 \cdot 1.204 + 0.47 \cdot 1.165)\frac{kg}{m^3} = 1.186\frac{kg}{m^3}$$

at 20 °C, 1013 mbar

$$v_{HOM} = 0.843\frac{m^3}{kg}$$ at 20 °C, 1013 mbar

it follows

$$A_{nitrogen} = \frac{15 \cdot 0.858}{\sqrt{100 \cdot 0.743}} m^2 = 1.402 m^2 .$$

Appendix A8 Requirements for pressure relief devices

To avoid damage on buildings and equipment by excessively high overpressure, provision must be made for pressure relief devices.

The following comments always refer to room protection systems (total flooding systems). For local application purposes the necessity of a pressure relief device for the equipment and/or the surrounding space must be checked in each case. If necessary, the requirements must be applied on a similar basis.

Pressure relief devices must meet the following requirements:

1. Each space within the flooding zone which is structurally segregated must be equipped with its own pressure relief device.

2. The pressure relief device must be sufficiently dimensioned taking into the account the allowable overpressure in the room, the maximum mass flow during the flooding process of the extinguishing gas and the type of pressure relief (resistance coefficient of the vent, pressure drop in the duct).

   If the pressure relief device is provided in form of a vent aperture in the perimeter of the flooding zone, leading straight into the open, the size of the required aperture can be calculated by means of the formula given in Annex A7 of this standard.

   If pressure venting into the open is provided in form of a duct, the pressure drop of the duct must be calculated additionally and must be considered for the dimensioning of the cross sectional surface.

   A duct must be suitable for taking up both the pressures and the gas flows.

   In case of pressure relief devices that open by the overpressure in the room, they shall not begin to open below 20 Pa. This shall be verified (e.g. by using door fan test equipment).

3. To avoid personal and property damage, the fire and extinguishing gases released by the pressure relief device must not result in a hazard outside the extinguishing zone.

   For this reason the pressure relief should always directly lead through a vent into the open.

   If a duct cannot be avoided, this duct must be sufficiently gas tight, should not be equipped with other outlets and should lead directly into the open. The duct must be designed so as to make sure that during pressure relief the fire is prevented from spreading into other areas and that damage of the duct resulting in a failure can be excluded.

   If pressure relief is possible only via the ventilation system in exceptional cases, the ducts must meet the above requirements. Account must be taken of the flow velocities and the possible failure of the shut-off devices.

4. The pressure relief device must close after completed pressure relief.

   Preferably the pressure relief device should be equipped with its own power source and should be able to open and close automatically.
   Pressure relief devices which depend on an external power supply must be triggered directly by the extinguishing system and must be energised by the extinguishing system (preferably with non-electric energy).

   If electrically triggered pressure relief devices are used in exceptional cases, the Guidelines for the Triggering of Extinguishing Systems must be observed.

If power supply is not safe in exceptional case, the pressure relief device shall guarantee sufficient pressure relief during the hold time even in case of failure of power supply.

If pressure relief takes place via a vent or a duct directly into the open and if no regulations for fire protection in terms of a fire resistant segregation of the perimeter walls containing the pressure relief vents are to be observed, louvered shutters can be used opening as a result of the their own weight or via reset springs at a certain overpressure in the room, i.e. switching into an inclined position and returning to home position after a decrease of the pressure thus closing the aperture.

As an alternative, pressure relief flaps can be used which are opened and closed e.g. by a pressure container which is directly controlled by the extinguishing system.

If requirements in terms of a structural segregation regarding fire resistance must be observed, the pressure relief devices must be designed accordingly.

5. If the extinguishing gas is heavier than air, a geodetic pressure builds up in the lower part of the room which depends on the density ratio of extinguishing gas/air and on the room height. Pressure relief devices which open by overpressure and which are installed in the lower part of the room, can cause the extinguishing gas to escape after the flooding process in particular under the effect of leaks in the upper part of the room. For this reason the pressure required for opening must be higher at the level of the pressure relief vent than the geodetic pressure generated by the extinguishing gas.

6. The pressure relief device must be installed so as to make sure that it is not positioned in the immediate discharge area of the nozzles of the extinguishing system.

7. Pressure relief must not be provided in the form of active exhaust suction devices.

Appendix A9 Testing methods for determination of extinguishing concentration by means of enclosure fire tests

This appendix corresponds to both, a testing method, which has been basis for the research work “extinguishing effects of inert gases” (see the final report CEA GEI7 N125 dated August 1998, appendix D), and a test method for plastic and cable fires worked out within the scope of ISO 14520. The test method for cable fires (A9.6 and A9.7) has been finalised by CEA based on test experiences, within ISO and CEN it is still under discussion.

A9.1. Principle

A9.1.1 An engineered or pre-engineered extinguishing system unit shall mix and distribute its extinguishant and shall totally flood the enclosure when tested in accordance with this test method.

A9.1.2 When tested as described in Section A9.5 an extinguishing system unit shall extinguish all visible flaming within 30 seconds after the end of extinguishant discharge. When tested as described in Section 4.1 an extinguishing system unit shall extinguish all visible flaming and prevent re-ignition of the fires after an 10 minute soak period (also measured from the end of extinguishant discharge).When tested as described in Sections A9.6 and A9.7 an extinguishing system unit shall “knock-down” the flames within 60 seconds after end of discharge (that means there are only flames allowed at the top edges of the 2 inner sheets) and extinguish all visible flaming within 3 minutes after the end of extinguishant discharge and also prevent re-ignition of the fires after an 10 minute soak period (also measured from the end of extinguishant discharge).

A9.1.3 The tests described herein consider the intended use and extinguishing concentrations for specific fuels.
The tests to be conducted are:

Test objective	**Enclosure size**	**Test fires**	**Section**
Extinguishing concentration	≥100m^3	(a) wood crib	A9.4
	no side less than 4 metres,	(b) heptane pan	A9.5
	height: 3,5m to 4,0m	(c) polymeric sheet	A9.6
		(i) PMMA	
		(ii) Polypropylene	
		(iii) ABS	
		(d) PVC cable tray	A9.7

A9.2. Extinguishing system

A9.2.1 For the extinguishing tests described in Sections A9.4, A9.5, A9.6 and A9.7, the agent containers are to be conditioned at 20°C ± 2°C for a minimum period of 16 hours prior to conducting the test. In these tests the jet energy from the nozzles shall not influence the development of the fire. Therefore the nozzle(s) shall direct agent parallel to the test enclosure ceiling.
A9.2.2 For all tests, the extinguishing system has to be arranged and dimensioned with regard the following:
For non-liquefied extinguishants the discharge time shall be 50 - 60 seconds, limited by cutting off the discharge with appropriate means positioned close to the nozzle. Therefore the storage containers are not completely empty. A part of the stored agent stays in the containers. For the tests, the amount of agent discharged in the test enclosure shall be between 65% and 90% of the stored quantity.

A9.3. Extinguishing concentration

A9.3.1 The extinguishing concentration for each test is to be 76.9 % (i.e. 100/Safety factor, where the safety factor is 1.3) of the intended end use design concentration specified in the manufacturer's design and installation instructions at the ambient temperature of approximately 20°C within the enclosure.
The quantity to reach the concentration within the enclosure can be established using the

equations in the specifications.
A9.3.2 A cold discharge test using the same quantity of extinguishant is to be conducted to verify the actual concentration of extinguishant.
For non-liquefied extinguishants, the agent concentration or alternatively the oxygen concentration shall be measured. The extinguishant concentration is then calculated from the oxygen concentration using the following formula:

$$C = 100\left(1 - \frac{O_2}{20.9}\right)$$

where
C is the extinguishant concentration, as a volume fraction in percent;
O_2 is the oxygen concentration measured in the test enclosure, as a volume fraction in percent.

A9.4 Wood crib test

A9.4.1. Test facility

A9.4.1.1. Construction

The test enclosure shall meet the following requirements:
a) The test enclosure shall have a minimum volume of 100 m^3. The height shall be at least 3.5 metres, at maximum 4 m. The floor dimensions shall be at least 4 metres wide by 4 metres long.
b) A means of pressure relief shall be provided.
Recommendation: The pressure vents should have a shape as quadratic as possible. The ratio of the sides should be at least 0.8. The opening shall be on the longer side wall with its center 0,5m to 1,5 m from the corner. The centre of the opening should be positioned in the upper third of the room height.
c) The temperature in the test enclosure shall be (20 ±5) °C at the beginning of each test and there shall be enough time between the tests so that the enclosure can adapt to this temperature.

A9.4.1.2. Instrumentation

Sampling and storage of data from the sensors described below shall occur at a rate of at least 4 Hz.

Oxygen concentrations
The oxygen level shall be measured by a calibrated oxygen analyser capable of measuring the percentage oxygen to within at least one decimal place (0.1 %). The sensing equipment shall be capable of continuously monitoring and recording the oxygen level inside the enclosure throughout the duration of the test. The accuracy of the measuring devices shall not be influenced by any of the fire products.

At least three sensors shall be located within the enclosure (Figures A9.1 and A9.2). One sensor shall be located at the equivalent height of the top of the test object from the floor, 0.6 metres to 1 metre away from the test object. The other two sensors shall be located at 0.1 *H and 0.9*H with H = height of the enclosure (Figures A9.1 and A9.2)

Informative note:
In addition to the oxygen concentrations there should also be monitoring of the CO_2 concentration. Fire products such as CO, CO_2 etc shall not have any influence on the valuation of the extinguishing capacity of the investigated extinguishing gas.

Nozzle pressure
The nozzle pressure during system discharge shall be recorded by a pressure transducer in the pipe work at a distance not greater than 1 metre from the nozzle.

Enclosure temperature
Temperature sensors shall be located centred 100 mm above the test object and 0.9*H (H = room height), and a third sensor at the equivalent height of the top of the test object from the floor, horizontally 0.6 m to 1 m away from the test object (Figures A9.1 and A9.2).
Informative note: It is recommended to use K type thermocouples (Ni-CrNi), diameter 1

mm.

Nozzle temperature
For liquefied extinguishants, the temperature of the liquid jet just outside the nozzle shall be recorded.

Infrared video camera
For tests with plastic sheets according to A9.6 and with cable tray according to A9.7, infrared video camera (or equivalent) shall be used to determine the flame out times.

Informative note: ***Video/observations***
Cameras, e.g. infrared-cameras, or an alternative means of directly viewing the fire can be provided as an aid to determining flame out times.

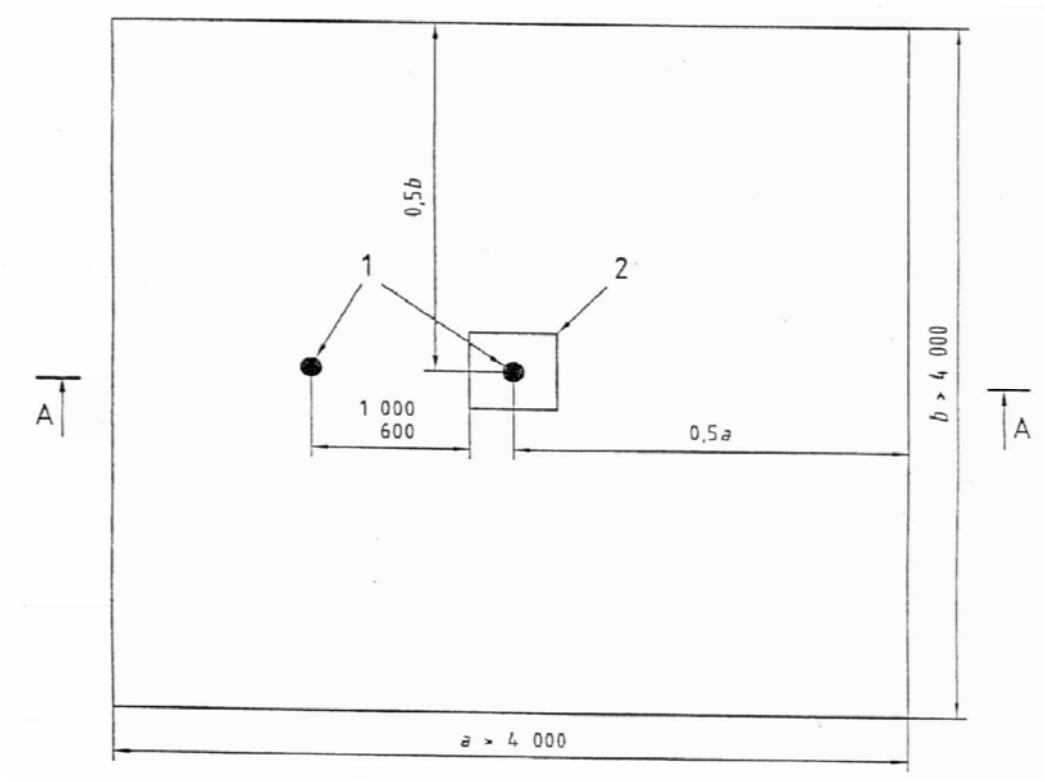

Figure A.9.1 - Plan view of instrumentation placement for the extinguishing concentration test

Unit of measurement: mm

Information: 1 measuring point
2 fire object

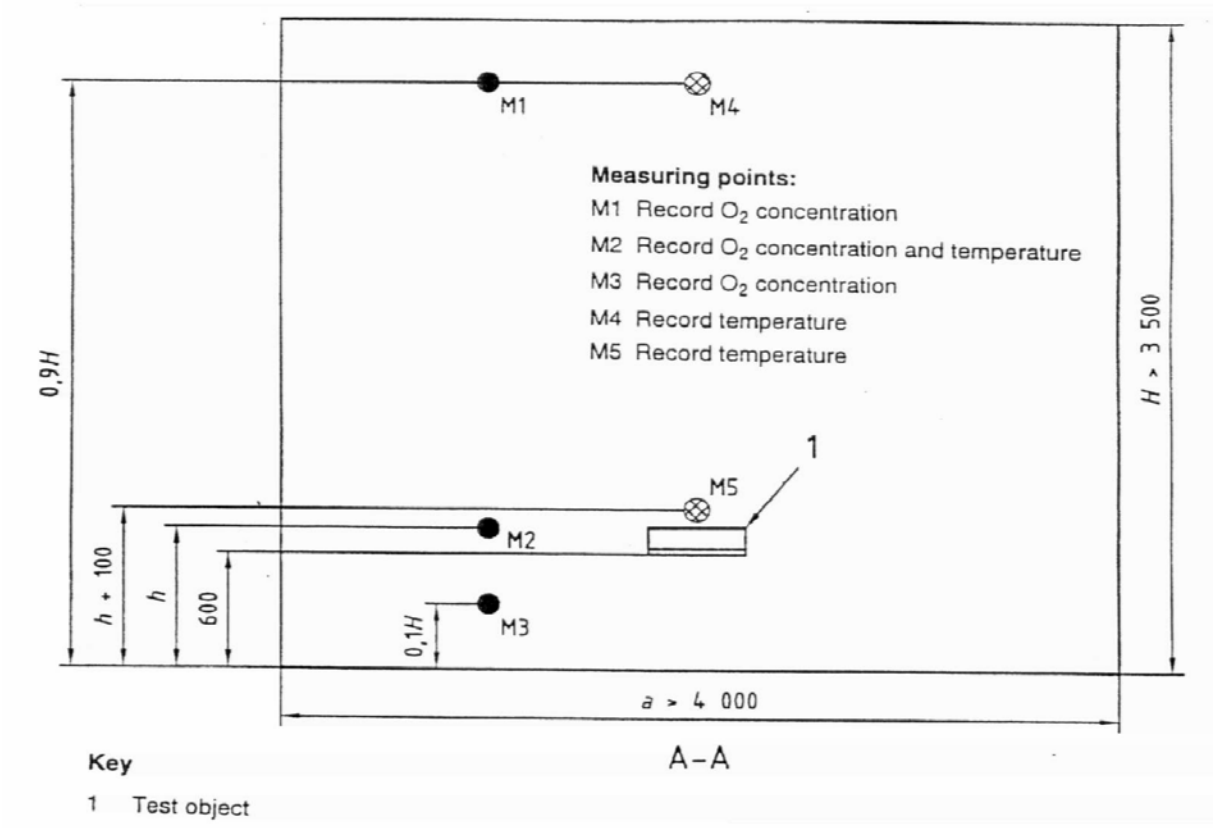

Figure A.9.2 - Side view of instrumentation placement for the extinguishing concentration test

Unit of measurement: mm

Information: 1 fire object

A9.4.2. Fuel specification

A9.4.2.1.Crib igniter fuel

Ignition of the crib is achieved by burning 1.5 litres of n-heptane (specified in table A9.2) on a 12.5 litre layer of water in a square steel pan 0.25 m^2 in area, 100 mm in height and with a wall thickness of 6 mm (see Figure A9.3).

Specification	**Value**
Purity	≥ 99 %
Boiling point at 1013 hPa	98.5 °C

Table A 9.2 specification of n-heptane

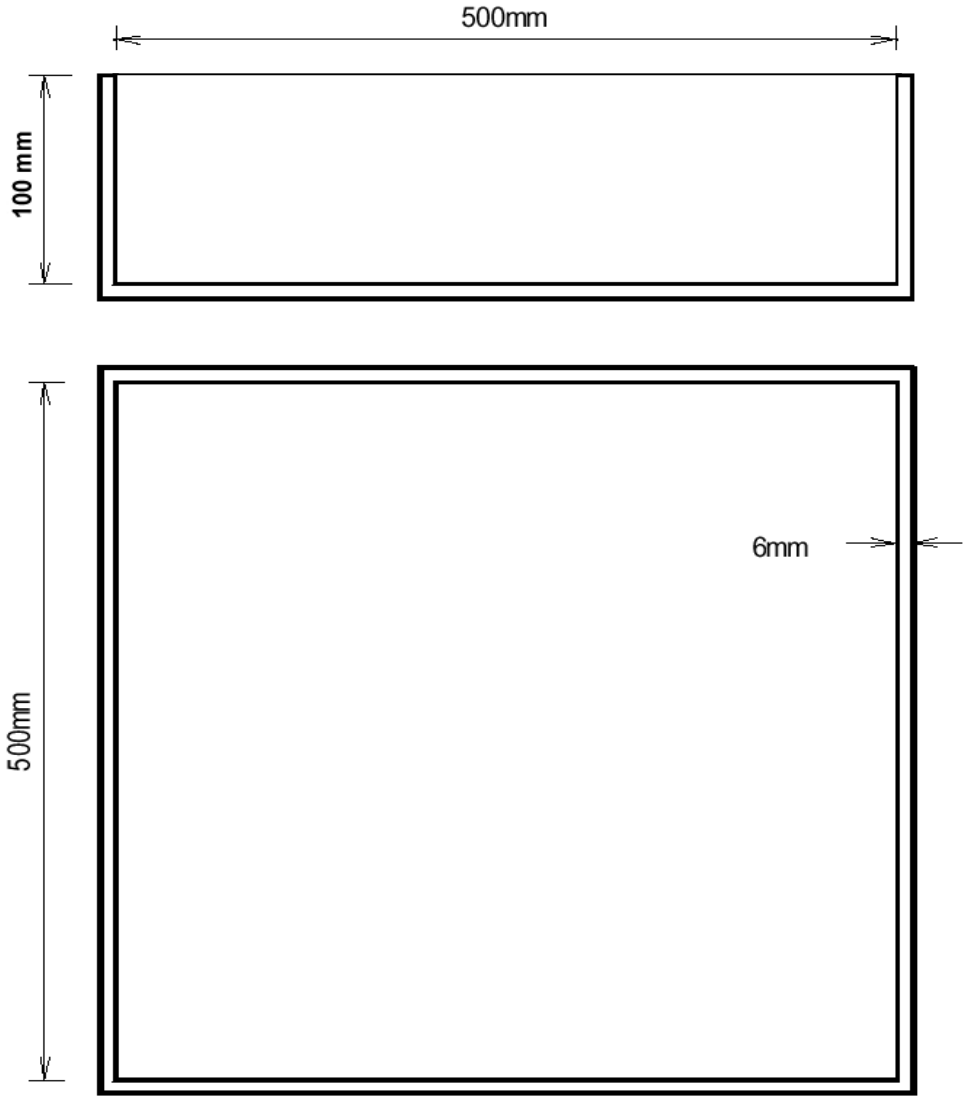

Figure A9.3 - Pan geometry for Wood crib and Heptane pan fire test

A9.4.2.2. Fire configuration and placement

The wood crib is to consist of four layers of six, approximately 40 mm x 40 mm by 450 ± 50 mm long, kiln spruce or fir lumber having a moisture content between 9% and 13%. Place the alternate layers of wood members at right angles to one another. Evenly space the individual wood members in each layer forming a square determined by the specified length of the wood members. Staple or nail together the wood members forming the outside edges of the crib.

The crib shall be pre-burned outside the enclosure on a stand supporting the crib 300 mm above the pan holding the igniter fuel (specified in Section A9.4.1.3.1).

After the pre-burn period the crib shall be moved into the enclosure and be located on a stand supporting the crib centrally within the enclosure with the base of the crib 600 mm above the floor (specified in Section A9.4.1.3.1).

A9.4.3. Test procedure

Prior to commencing tests the composition of the extinguishing gas shall be analysed. Record the weight and the moisture of the crib prior to the test.

A9.4.3.1.Operation

Centre the crib with the bottom of the crib approximately 300 mm above the top of the pan on a test stand constructed so as to allow for the bottom of the crib to be exposed to the atmosphere. The pre-burning shall take place outside the enclosure, if possible in a sufficiently dimensioned room (at least five times the volume of the test enclosure). In any case, the pre-burning shall not be influenced by weather conditions such as rain, wind, sun etc. The maximum wind speed in the proximity of the fire shall be 3 m s^{-1}. If necessary, adequate means for protection against wind, etc. may be used. Record the weather conditions including location of pre-burn, air temperature, humidity, and wind speed.

Ignite the heptane and allow the crib to burn freely. The 1.5 litres of heptane will provide a burn time of approximately 3 minutes. After the heptane is exhausted, the crib shall be allowed to burn freely for an additional time of 3 minutes. resulting in a total pre-burn time of 6 minutes (+10/-0s) outside the test enclosure.

Just prior to the end of the pre-burn period, move the crib into the test enclosure and place it on a stand such that the bottom of the crib is 600 mm above the floor. Seal the enclosure and actuate the system. The time required to position the burning crib in the enclosure and the actuation of the system discharge shall not exceed 15 seconds.

At the time of actuation of the system, the amount of oxygen within the enclosure at the level of the crib shall not be more than 0.5 vol% lower than the normal atmospheric oxygen concentration. During the test, the oxygen concentration shall not change more than 1.5 vol% due to fire products. This change shall be determined by comparing the oxygen concentration measured in the cold discharge test with the oxygen concentration measured in this fire test (averaged values). If the start-O_2-concentration in the fire tests and the cold discharge test is different, this has to be taken into account while comparing the O_2-concentrations.From the end of system discharge, the enclosure is to remain sealed for a total of 10 minutes. After the soak period, remove the crib from the enclosure and observe to determine that sufficient fuel remains to sustain combustion and for signs of re-ignition. The following shall be recorded:

a) presence and location of burning embers,

b) whether or not the glowing embers or crib re-ignites; and

c) weight of the crib after the test.

If necessary, amend the extinguishant concentration and repeat the experimental programme until 3 successive, successful extinguishments are achieved.

A9.4.3.2.Results recording

After the required pre-burn period, record the following data for each test:

a) The calculated discharge time of extinguishant, i.e. the time needed to reach 95% of the laboratory extinguishant concentration, in seconds.

b) The effective discharge time, i.e. for halocarbons the time of the pre-liquid gas phase plus the time of the two phase flow; for non-liquefied inert gases the time from opening the container valve(s) to cutting off the discharge. The discharge time for halocarbons has to be determined by nozzle pressure, nozzle temperature or combination of both.

c) The time required to achieve extinguishment, in seconds. This time shall be determined by visual observation or other suitable means.

d) The total mass of extinguishant discharged into the test enclosure.

e) The soaking time (time from the end of system discharge until the opening of the test enclosure)

f) Recording the temperature profile of the wood crib, using the infrared camera, is recommended.

A9.4.4. Determination of design extinguishant concentration

The laboratory extinguishant concentration is that concentration which achieves satisfactory extinguishment of the fire over 3 successive tests (no re-ignition or existence of burning embers after 10 minutes after end of discharge). The design concentration is the laboratory concentration multiplied by an appropriate 'safety factor'.

A9.5 Heptane pan test

A9.5.1 Test facility

A9.5.1.1 .Construction

Construction of the enclosure is as described in Section A9.4.1.1.

A9.5.1.2.Instrumentation

Instrumentation of the enclosure is as described in Section A9.4.1.2.

A9.5.2. Fuel specification

A9.5.2.1.Heptane

The heptane has to be n-heptane having the characteristics according to Section A9.4.2.1.

A9.5.2.2. Fire configuration and placement

The fire will be a square steel pan of 0.25 m^2, 100 mm high with a wall thickness of 6 mm as specified in Section A9.4.2.1. The test pan is to contain 12.5 litres of heptane. The resulting heptane surface is then 50 mm below the top of the pan.
The steel pan shall be located in the centre of the test enclosure with the bottom 600 mm above the floor of the test enclosure.

Note: The following requirements regarding additional 8 test cans shall ensure that the main test object has been extinguished by the agent concentration and not by blowing out effects. The number of test cans can be reduced due to symmetrical reasons (symmetry of the test enclosure, nozzle arrangement and nozzle jets). The additional test cans are not necessary if by other means it is ensured that the fire has not been blown out (e.g. extinguishment after end of discharge). or due to symmetry of the room

In addition to the main test object, 8 test cans filled with n-heptane shall be positioned in the upper and lower corners f the test room.
The test cans shall have the following dimensions:
inner diameter of 80 mm to 82 mm,
wall thickness of 5 mm to 6 mm,
height of 100 mm to 110 mm.
They shall be filled with heptane up to a height of 50 mm to 55 mm.
The bottom of the cans is to be positioned 400 mm to 500 mm below the ceiling for the 4 upper test cans, 400 mm to 500 mm above the bottom for the lower test cans. The distance from the walls shall be 50 mm to 55 mm to each of the 2 nearest side walls.
The test cans shall be protected from direct jet by baffles. The vertical baffles form together with the walls of the test room a rectangular form around each test can. The baffles are positioned in a horizontal distance of 150 to 155 mm from the cans and they are tightly connected with the walls. The height of the baffles is 200 mm to 205 mm, their bottom line goes 0 mm to 5 mm lower then the bottom of the test cans.
The construction of test cans and baffles shall not be closed on top or bottom side.

A9.5.3. Test procedure

Prior to commencing tests the composition of the extinguishing gas shall be analysed.

A9.5.3.1.Operation

The heptane is to be ignited and allowed to burn for 30 seconds. The heptane in the test cans should be ignited automatically at the same time or at least directly before the main pan.
After 30 seconds all openings are to be closed and the extinguishing system is to be manually actuated. At the time of actuation of the system, the amount of oxygen within the enclosure shall not be more than 0.5 vol% lower than the normal atmospheric oxygen concentration. During the test, the oxygen concentration shall not change more than 1.5 vol% due to fire products. This change shall be determined by comparing the oxygen concentration measured in the cold discharge test with the oxygen concentration

measured in this fire test (averaged values). If the start-O_2-concentration in the fire tests and the cold discharge test is different, this has to be taken into account while comparing the O_2-concentrations.
The test is only positive if the main test object is extinguished at the same time as the test cans are extinguished or later.

If necessary, amend the extinguishant concentration and repeat the experimental programme until 3 successive, successful extinguishments are achieved.

A9.5.3.2.Results recording

Results are to be recorded as specified in Section A9.4.3.2 with the exception of notes e) and f).

A9.5.4. Determination of design extinguishant concentration

The laboratory extinguishant concentration is that concentration which achieves satisfactory extinguishment of the fire over 3 successive tests (no flaming 30 seconds after the end of extinguishant discharge). The design concentration is the laboratory concentration multiplied by an appropriate 'safety factor'.

A9.6 Polymeric sheet fire test

A9.6.1. Test facility

A9.6.1.1 .Construction

Construction of the enclosure is as described in Section A9.4.1.1.

A9.6.1.2.Instrumentation

Instrumentation of the enclosure is as described in Section A9.4.1.2.

A9.6.2. Fuel specification

A9.6.2.1. Igniter fuel

The ignition source is a heptane pan (constructed of 2 mm thick mild or stainless steel) with inside to inside dimensions of 51 mm x 112 mm and 21 mm deep centred below the bottom of the plastic sheets (see Figure A9.4). The 51 mm side of the pan is orientated parallel to the sheets of polymeric fuel. The pan is filled with 6.0 ml of n-heptane (specified in A9.4.2.1) on a water base of 40 ml.

A9.6.2.2. Polymeric fuel

Tests are to be conducted with three plastic fuels:
- Polymethylmethacrylate (PMMA);
- Polypropylene (PP),
- Acrylonitrile-butadiene-styrene polymer (ABS).

Plastic properties are given in Table A9.3.

25 kW/m^2 Exposure in Cone Calorimeter - ASTM E 13554								
					180 Second Average		Effective	
		Density	Ignition Time		Heat Release Rate		Heat of Combustion	
Fuel	Colour	g/cm^3	sec	Tolerance	kW/m^2	Tolerance	MJ/kg	Tolerance
PMMA	Black	1.19	77	±30%	286	25%	23.3	±25%
Polypropylene	Natural (White)	0.905	91	±30%	225	25%	39.6	±25%
ABS	Natural (Cream)	1.04	115	±30%	484	25%	29.1	±25%

Table A9.3 - Plastic properties

A9.6.2.3. Polymeric fuel array

The polymeric fuel array consists of 4 sheets of polymer, which are cut to 405mm ± 5mm high by 200mm ± 5mm wide. The thickness of the sheets shall be as follows:
- Polymethylmethacrylate (PMMA) – 10.0 ±1.0mm,
- Polypropylene (PP) –10.0± 1.0mm
- Acrylonitrile-butadiene-styrene polymer (ABS) – 10.0 ± 1.0mm.

Sheets are spaced and located as per Figure A9.4 and A9.5. The bottom of the fuel array

is located 203 mm from the floor. The fuel sheets shall be mechanically fixed at the required spacing. The sheets of plastic shall not significantly bend during the test. This can be reached e.g. by supporting each sheet on both vertical sides at 3 different heights. The fuel array shall be located centrally within the enclosure.

A9.6.2.4. Fuel shield

A fuel shield consisting of a metal frame with sheet metal on the top and two sides shall be provided around the fuel array as indicated in Figure A9.4. The fuel shield is 380 mm wide, 850 mm high and 610 mm deep. The 610 mm (wide) x 850 mm (high) sides and the 610 mm x 380 mm top are metal sheet. The two remaining sides and bottom are open.

The metal sheet shall be aluminium with a wall thickness of 2 to 3 mm.

The fuel array is oriented in the fuel shield such that the 200 mm dimensions of the fuel array is parallel to the 610 mm side of the fuel shield.

A9.6.2.5.External baffles

External baffles are constructed as shown in Figure A9.6 and are located around the exterior of the fuel shield. The baffles are placed 90 mm above the floor. The top baffle is rotated 45° with respect to the bottom baffle.

A9.6.3. Test procedure

Prior to commencing tests the composition of the extinguishing gas shall be analysed. Record the weight of the plastic sheets prior to the test.

A9.6.3.1.Operation

The heptane is ignited and allowed to burn completely. 210 seconds after ignition of the heptane, all openings are to be closed and the extinguishing system is to be manually actuated.

At the time of actuation of the system, the amount of oxygen within the enclosure at the level of the fuel shall not be more than 0,5 vol% lower than the normal atmospheric oxygen concentration. During the test, the oxygen concentration shall not change more than 1.5 vol% due to fire products. This change shall be determined by comparing the oxygen concentration measured in the cold discharge test with the oxygen concentration measured in this fire test (averaged values). If the start-O_2-concentration in the fire tests and the cold discharge test is different, this has to be taken into account while comparing the O_2-concentrations.

The enclosure is to remain sealed for a total of 10 minutes from end of discharge. After the soak period, ventilate the enclosure and observe to determine that sufficient fuel remains to sustain combustion and for signs of re-ignition. The following shall be recorded:

a) presence and location of burning fuel;

b) whether or not the fire re-ignites; and

c) weight of the fire structure after the test.

If necessary, amend the extinguishant concentration and repeat the experimental programme until 3 successive, successful extinguishments are achieved.

A9.6.3.2.Results recording

After the required pre-burn period, record the following data for each test:

a) The calculated discharge time of extinguishant, i.e. the time needed to reach 95% of the laboratory extinguishant concentration, in seconds.

b) The effective discharge time, i.e. for halocarbons the time of the pre-liquid gas phase plus the time of the two phase flow; for non-liquefied inert gases the time from opening the container valve(s) to cutting off the discharge. The discharge time for halocarbons has to be determined by nozzle pressure, nozzle temperature or combination of both.

c) The time to achieve “knock down” of the flames, that means the time when there are only flames at the top edges of the 2 inner plastic sheets, in seconds. This time shall be determined by visual observation or other suitable means.

d) The time required to achieve extinguishment, in seconds. This time shall be determined by visual observation or other suitable means.

e) The total mass of extinguishant discharged into the test enclosure.

f) The soaking time (time from the end of system discharge until the opening of the test enclosure).

A9.6.4. Determination of design extinguishant concentration

The laboratory extinguishant concentration for each fuel is that concentration which achieves satisfactory extinguishment of the fire over 3 successive tests (only flames at the top edges of the 2 inner plastic sheets at 60 seconds after end of discharge, no flaming 180 seconds after end of discharge and no re-ignition after 10 minutes from end

of discharge).

The design concentration is the highest of the laboratory concentrations for the three fuels (see A9.6.2.2) multiplied by an appropriate 'safety factor', if the three laboratory concentrations are higher than the laboratory concentration according to A9.7.4.

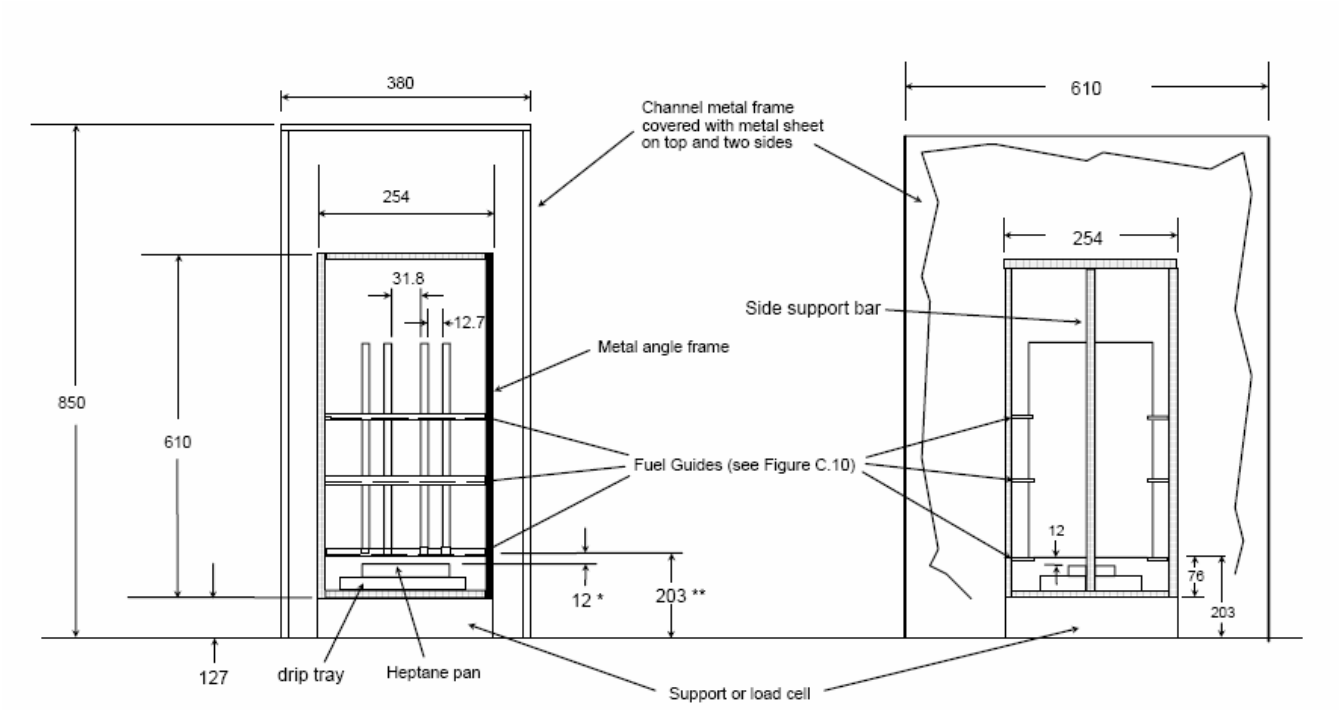

All dimensions in mm

*** top of ignition pan to bottom of plastic sheets**
**** floor to bottom of plastic sheets**

Figure A9.4 - Polymeric sheet fire

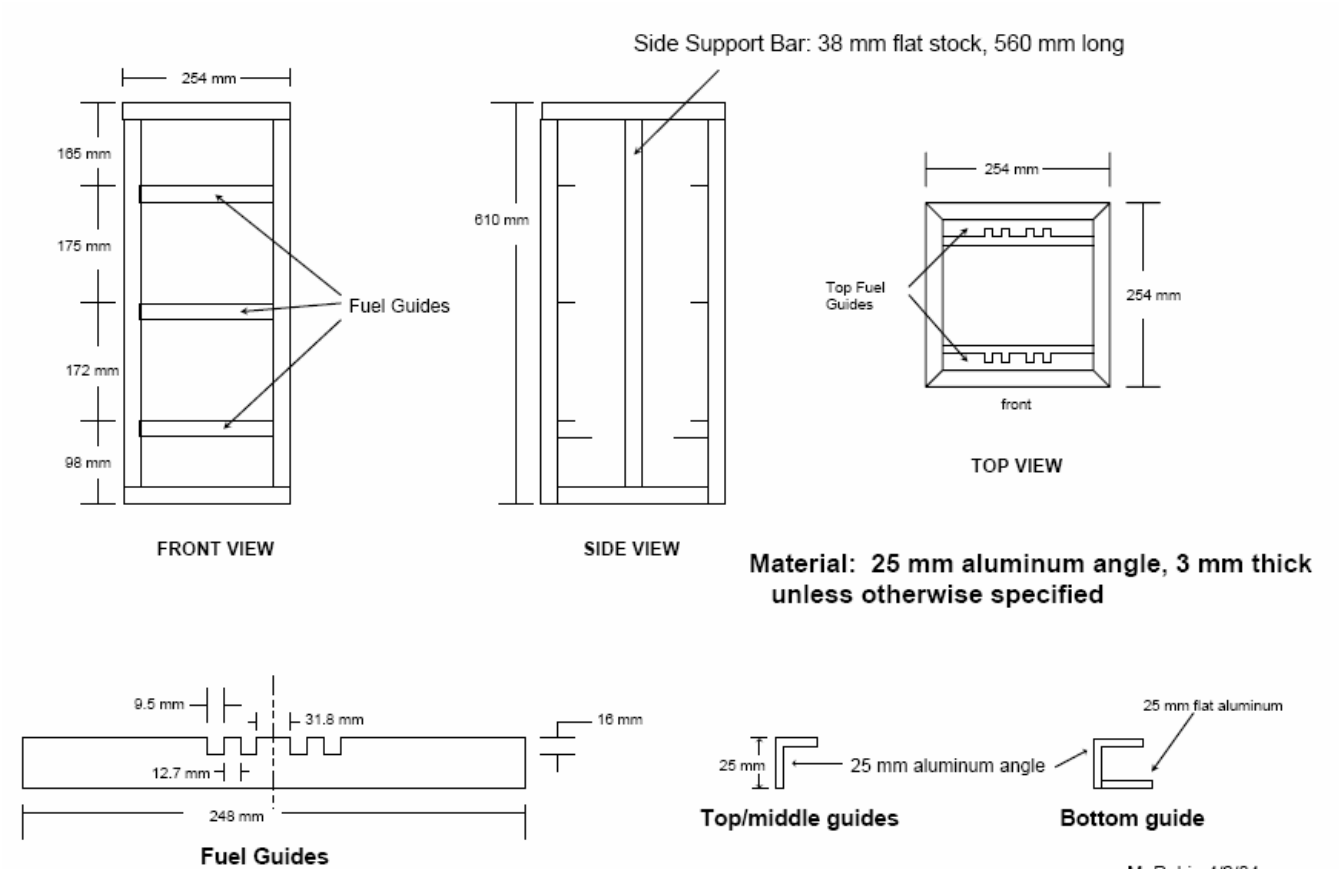

Figure A9.5 - Polymeric sheet fire – fuel guides

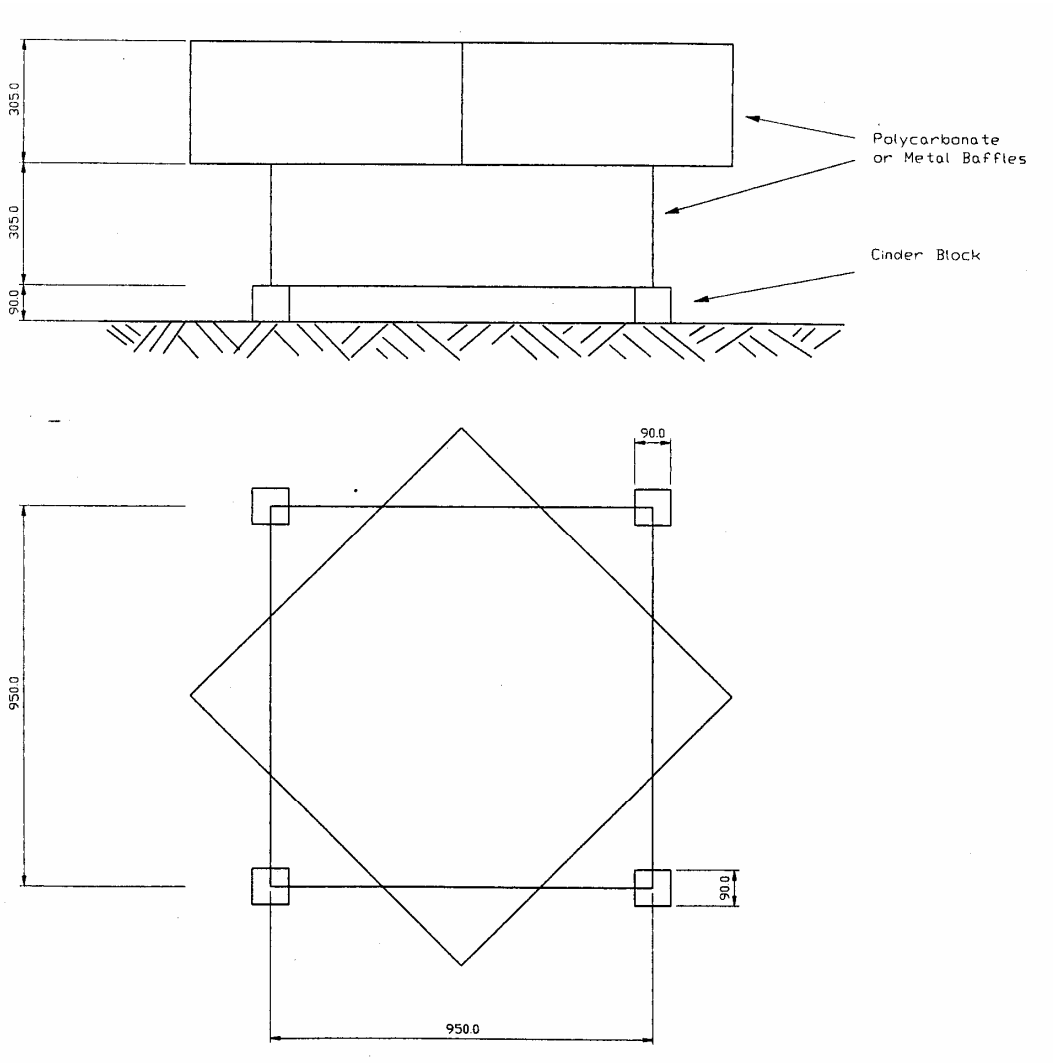

Figure A9.6 - Polymeric fire baffle arrangement

A9.7 PVC Cable tray fire test

Note: Test method described in A9.7 is still under development.

A9.7.1. Test facility

A9.7.1.1.Construction

Construction of the enclosure is as described in Section A9.4.1.1.

A9.7.1.2. Instrumentation

Instrumentation of the enclosure is as described in Section A9.4.1.2.

A9.7.2. Fuel specification

A9.7.2.1. Igniter fuel

The ignition source is a heptane pan (2 mm thick stainless steel) with inside to inside dimensions of 200 mm by 200 mm and 20 mm deep centred 75 mm below the lowest cable tray (see Figure A9.7). The pan shall be placed on a flat surface at the required height. The pan is filled with 65 ml of n-heptane (specified in A9.4.2.1) without a water layer.

A9.7.2.2. PVC Cables

The test shall use Surface Wiring cable conforming to BS6004. The PVC casing houses two insulated conductors and an exposed earth continuity conductor.

Component properties of the wire are given in Table A9.2.

Cable Part	Weight (g/m)	Mass %
External sheathing	75	32.6
Internal sheathing	35	15,2
Internal copper wire	100	43.5
Copper core	20	8.7

Table A9.2 - Properties of PVC cable for cable tray fire test

A9.7.2.3. Cable tray details

The test shall use tray according to the specifications in fig. A9.8 and A9.9.

Component properties of the tray are given in Table A9.3.

A9.7.2.4. Fuel configuration and placement

The cable array consists of 6 cable tray layers, each with 10 evenly spaced cables on it. Dimensions and arrangement of the cables are as described in Table A9.3 and Figure A9.7. The bottom of the fuel array is located 100 mm from the floor

The fuel array shall be located centrally within the enclosure.

Test Parameter	Measurement
Cable tray length	750mm
Cable tray width	225 mm
Cable length	650mm
Number of cables per layer	10
Cable separation (distance between centres)	20 mm
Cable tray porosity	20.3%
Cable tray thickness	1 mm
Cable tray separation	20mm
Starter fuel (heptane) quantity	100ml
Height of fire above base of starter fuel tray	75mm

Table A9.3 • Specification of the PVC cable tray fire

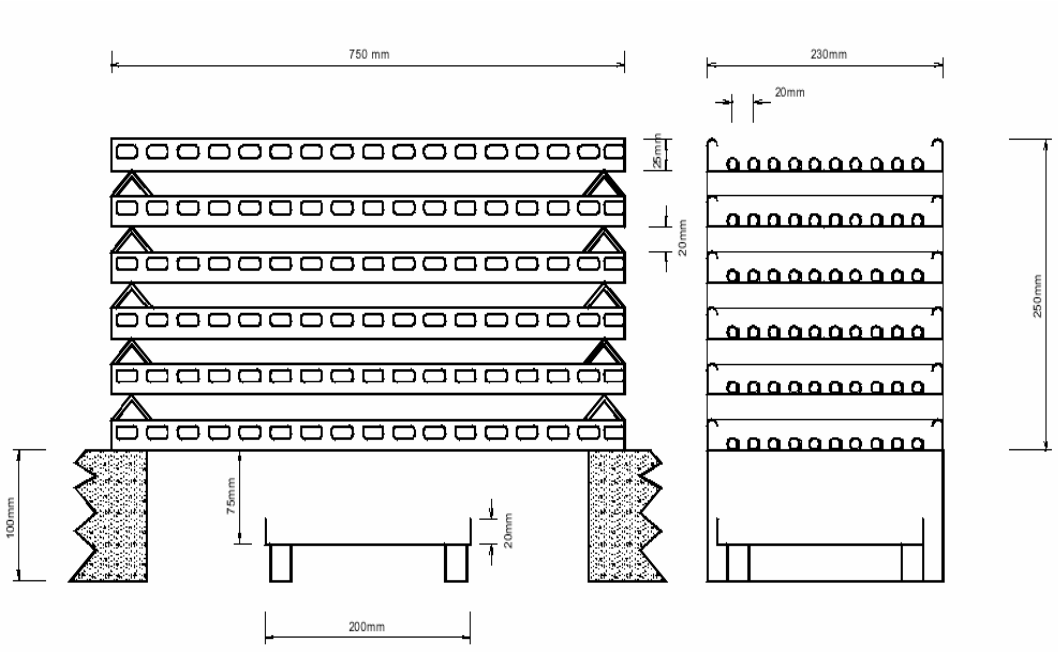

Figure A9.7 - PVC cable tray fire

A9.7.3. Test procedure

Prior to commencing tests the composition of the extinguishing gas shall be analysed. Record the weight of the cables prior to the test.

A9.7.3.1. Operation

The heptane is ignited and allowed to burn completely. 195 seconds after ignition of the heptane, all openings are to be closed and the extinguishing system is to be manually actuated.

Note: At that time the heat release rate of the cable array is between 20 and 25 kW.

At the time of actuation of the system, the amount of oxygen within the enclosure at the level of the fuel shall not be more than 0.5 vol% lower than the normal atmospheric oxygen concentration. During the test, the oxygen concentration shall not change more than 1.5 vol% due to fire products. This change shall be determined by comparing the oxygen concentration measured in the cold discharge test with the oxygen concentration measured in this fire test (averaged values). If the start-O_2-concentration in the fire tests and the cold discharge test is different, this has to be taken into account while comparing the O_2-concentrations.The enclosure is to remain sealed for a total of 10 minutes after end of discharge. After the 10 minute soak period, ventilate the enclosure and observe to determine that sufficient fuel remains to sustain combustion and for signs of re-ignition. The following shall be recorded:

a) presence and location of burning fuel,

b) whether or not the cables re-ignite; and

c) weight of the cables after the test.

If necessary, amend the extinguishant concentration and repeat the experimental programme until 3 successive, successful extinguishments are achieved.

A9.7.3.2. Results recording

After the required pre-burn period, record the following data for each test:

a) The calculated discharge time of extinguishant, i.e. the time needed to reach 95% of the laboratory extinguishant concentration, in seconds.

b) The effective discharge time, i.e. for halocarbons the time of the pre-liquid gas phase plus the time of the two phase flow; for non-liquefied inert gases the time from opening the container valve(s) to cutting off the discharge. The discharge time for halocarbons has to be determined by nozzle pressure, nozzle temperature or combination of both.

c) The time required to achieve extinguishment, in seconds. This time shall be determined by visual observation or other suitable means.

d) The total mass of extinguishant discharged into the test enclosure.

e) The soaking time (time from the end of system discharge until the opening of the test enclosure).

A9.7.4. Determination of design extinguishant concentration

The laboratory extinguishant concentration is that concentration which achieves satisfactory extinguishment of the fire over 3 successive tests (no flaming 60 seconds after end of discharge and no re-ignition after 10 minutes from end of discharge).

The design concentration is the laboratory concentration multiplied by an appropriate 'safety factor', if the laboratory concentration is higher than the three laboratory concentrations according to A9.6.4.

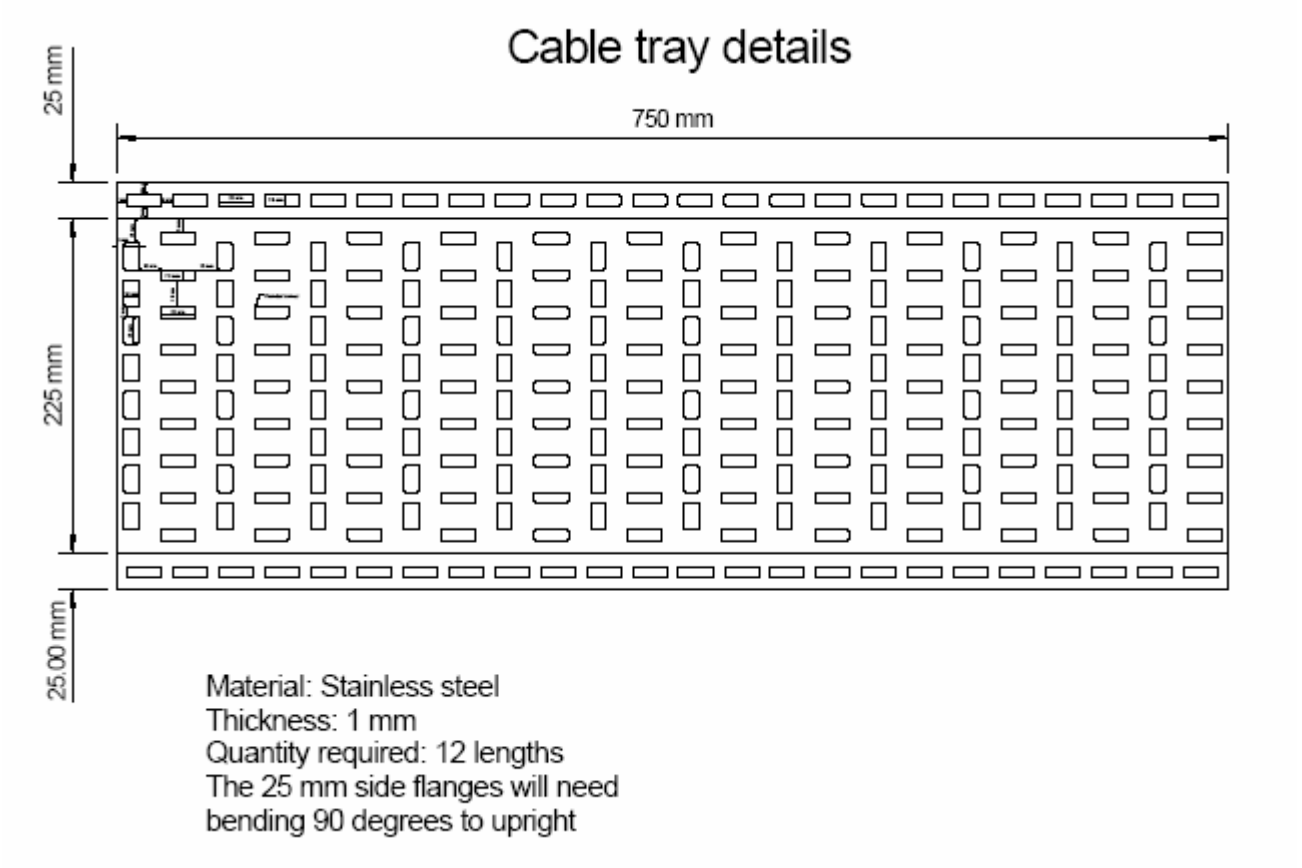

Figure A9.8 – Cable tray details

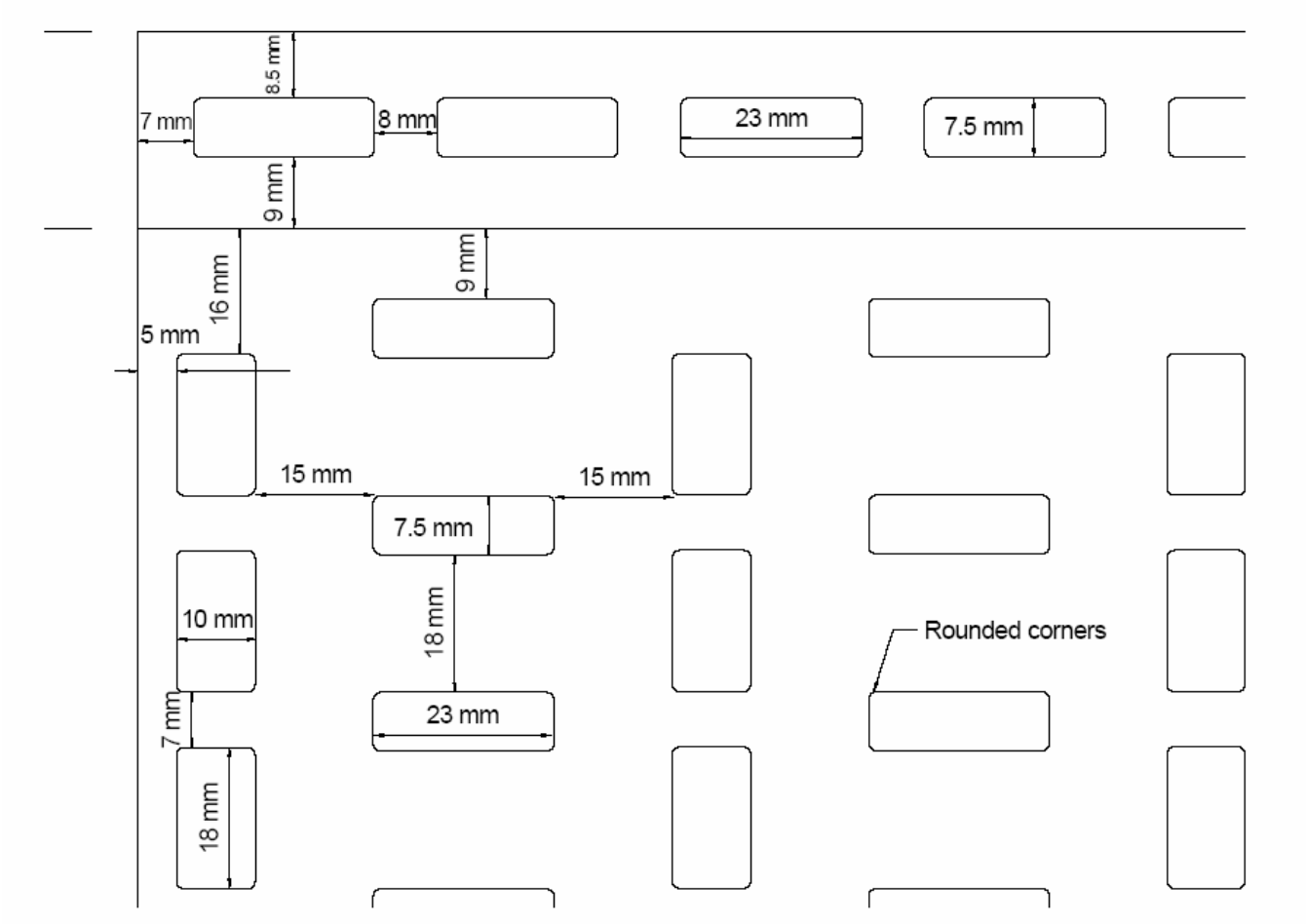

Figure A9.9 – Cable tray details - zoom

Appendix A10 Door fan test for determination of hold time

A10.1 Scope

This annex contains information to establish the integrity of rooms and enclosures with respect to maintaining the extinguishant concentration for the relevant period. It includes details of testing.

This procedure cannot be used to predict what extinguishant concentrations may develop in adjoining spaces.

This procedure is only suitable providing:
a) An adequate return air path exists (ref: A10.2.4.2 & A10.2.7.1.3)
b) The fan unit(s) can develop an enclosure pressure of 25Pa (this is a function of a the size of the enclosure, its integrity, and the number and capacities of the fans – ref: A10.2.2.1 & A10.2.7.4.3)

The calculation procedures used are based upon heavier than air extinguishants. If extinguishants are lighter than air the calculation procedures and pass/fail criteria may need to be modified. The Hold Time calculation model, for enclosures without mixing, assumes that the enclosure has a constant cross sectional area with horizontal upper and lower boundaries. Expert advice must be sought on the possible use of this model to provide a Hold Time prediction for enclosures of other shapes.

A10.2 Test for determination of predicted hold time

A10.2.1 Principle

A fan is temporarily located within an access opening to pressurize and depressurize the enclosure. A series of pressure and air flow measurements is made from which the leakage characteristics of the enclosure are established.

The predicted hold time is calculated using these leakage characteristics on the following assumptions.

a) That leakage occurs under the worst conditions, i.e. when one half of the effective leakage area is at the maximum enclosure height and represents the inward leakage of air, and the other half (the lower leakage area) of the total equivalent leakage area is at the lowest point in the enclosure and represents the outward leakage of extinguishant/air.

b) That all leak flow is one-dimensional, i.e. ignoring stream functions.

c) That flow through any particular leak area is either into or out of the enclosure and respectively either from or into an infinitely large space.

d) That the system is at a temperature of 20°C, and atmospheric pressure is 1,013 bar absolute.

A10.2.2 Apparatus

A10.2.2.1 Fan unit, consisting of a frame which will fit into and seal an access opening in the enclosure, and one or more variable speed fans, with low flow facilities, capable of giving a differential pressure of not less than 25 Pa across the enclosure boundary.

A10.2.2.2 Two pressure measuring devices, one to measure enclosure differential pressure and one to measure fan flow pressure. In addition, one pressure measuring device shall be used suitable for measuring the atmospheric pressure.

A10.2.2.3 Flexible tubing, for connecting the pressure measuring devices.

A10.2.2.4 Chemical smoke pencils and/or smoke generator.

A10.2.2.5 Two thermometers, to measure ambient temperatures.

A10.2.2.6 Signs reading "DO NOT OPEN – PRESSURE TEST IN PROGRESS" and "DO NOT CLOSE - PRESSURE TEST IN PROGRESS".

NOTE 53 Additional apparatus, such as measuring tapes, torches, ladders, tools to remove floor and ceiling tiles, computer or other calculating device, camera, may be necessary or convenient.

A10.2.3 Calibration and accuracy of apparatus

A10.2.3.1 Fan unit

Calibrate the fan unit at the intervals and by the method recommended by the manufacturer. Keep records and where appropriate calibration certificates. The flow rate shall be accurate to +/- 5% of the measured value.

A10.2.3.2 Pressure measuring devices

The pressure measuring devices shall be accurate to +/- 1Pa and shall be calibrated periodically. Records shall be maintained and where appropriate calibration certificates.
The pressure measuring device for determination of the flow rate through the fan may have other accuracies as long as A10.2.3.1 is fulfilled.

If inclined manometers are used, change the fluid according to manufacturer's recommendation. Level and zero inclined manometers before each test.

The pressure measuring device for the atmospheric pressure shall be accurate to ±100Pa.

A10.2.3.3 Temperature measuring devices

Temperature measuring devices must be accurate to +/- $1^{o}C$.

A10.2.4 Preliminary preparation

A10.2.4.1 Obtain a description of air-handling equipment and extinguishant extraction systems, serving the enclosure and its surroundings, from the user.

A10.2.4.2 Check for the following:

a) Raised platform floors and false ceiling spaces.

b) Visually obvious leaks in the enclosure.

c) Adequate return paths outside the enclosure between all leaks and the fan unit.

d) Conflicting activities in and around the enclosure.

e) visually obvious leaks in the door and other openings, that are chosen for the installation of the fan unit

A10.2.4.3 Provide the following information to the user:

a) A description of the test.

b) The time required to complete the test.

c) What assistance will be needed from the user's staff.

d) Information on any necessary disturbance to the building or its services during the test; for example, removal of floor or ceiling tiles, shutdown of air handling systems, holding doors open and/or shut.

A10.2.5 Evaluation of enclosure

A10.2.5.1 General

Obtain or prepare a sketch plan showing the enclosure and its surroundings, the size and location of door and other openings through which air will flow during the test, and the location of any ducts penetrating the enclosure, and any dampers in the ducts. Show the status (i.e. whether open, closed, on, off during the Hold Time) of each door, hatch, damper and other significant items (e.g. fans), and which access opening(s) is(are) to be used for the fan unit.

Show size and location of floor and sink drains.

A10.2.5.2 Mixture during Hold time

Test enclosures with permanent mixing are rooms without an interface due to e.g. recirculating air-handling. During Hold time there is a uniform extinguishing gas concentration in the enclosure.

Test enclosures without permanent mixing are rooms without a significant, mechanically or thermally caused mixture during Hold time.

If it is not sure, whether there is a test enclosure with or without permanent mixing, calculation shall be done for both situations (according to clause A10.2.8.6 and A10.2.8.7). The lower value shall be used.

A10.2.6 Measurement of enclosure

A10.2.6.1 Standard Enclosures without mixing

Standard enclosures are those with a uniform horizontal cross section and horizontal upper and lower boundaries. Measure the protected enclosure volume as necessary and record the following:

a) The overall height of the protected enclosure, H_o

b) Determine the required protected height (H) (see clause 2.10).

c) The gross volume of the protected enclosure, V_g

A10.2.6.2 Enclosures with irregular boundaries without mixing

For enclosures with irregular boundaries, without mixing, it is not possible to give general guidance. Contact the authority.

A10.2.6.3 Enclosures with mixing

The height from the lowest point within the enclosure to the highest point within the enclosure must be used as the overall height of the enclosure (H_o). The volume of the enclosure shall be recorded.

A10.2.6.4 Opening for installation of the fan unit

If there is significant leakage in the door or another opening, where the fan unit shall be installed, this leakage shall be measured and recorded.

A10.2.7 Test procedure

A10.2.7.1 Preparation

A10.2.7.1.1 Advise supervisory personnel in the area of the test.

A10.2.7.1.2 Remove papers and objects likely to be disturbed by the air stream from the fan.

A10.2.7.1.3 Block open sufficient doors outside the enclosure envelope to provide an adequate return path for air between the fan unit and the enclosure boundaries while correcting any breach of any requirements of the facility, including requirements for security, fire protection and environmental boundaries.

A10.2.7.1.4 Using the sketch plan (see A10.2.5) set the enclosure air-handling equipment and extinguishant extraction systems to the state they would be in during the Hold Time, except that—

a) recirculating air-handling equipment without fresh air make-up which does not give a bias pressure across the enclosure boundary or otherwise preclude accurate testing, and which would be shutdown on extinguishant discharge, may be left operating during the test if this is needed to avoid temperature build-up in equipment such as computers; and

b) recirculating air-handling equipment which would continue to operate on extinguishant discharge should be shut down if it creates excessive bias pressure.

A10.2.7.1.5 Post the appropriate signs on doors (see A10.2.2.6).

A10.2.7.1.6 Open doors and remove floor or ceiling tiles within the extinguishant protected portions of the enclosure envelope so that the extinguishant protected volume is treated as one space. Do not remove false ceiling tiles if the volume above the false ceiling is not protected with extinguishant.

Caution: Suitable measurements shall prevent danger due to removing floors

A10.2.7.1.7 Set all doors and windows and other openings in the enclosure envelope to the state they would be during the Hold Time. Tightening measures only for door fan testing are not allowed. Locking of parts of the enclosure is only allowed if it is verified that these parts do not move below 20 Pa or column pressure whichever is higher.

A10.2.7.1.8 Check that liquid traps in the floor and sink drains are sealed with liquid, if this is normal condition.

A10.2.7.1.9 Record the conditions (enclosure, surroundings, and services) during the fan test.

A10.2.7.2 Setting up the door fan unit

A10.2.7.2.1. Set up the fan unit in an access opening leading from the enclosure into the largest volume of building space which will complete the air flow path from the fan, via the enclosure, leaks, and building space back to the fan.

A10.2.7.2.2 Gently blow into, or suck from, the flexible tubing so that the readings of the pressure measuring devices traverse the full scale. Hold the maximum reading for not less than 10s.

Release the pressure and zero the devices.

A10.2.7.2.3. Connect the enclosure differential pressure measuring device. Ensure that the open ends of the flexible tubing near the fan unit are away from its air stream path and any other air flows which might affect the readings.

A10.2.7.2.4 Use the fan(s) to raise or lower the pressure of the enclosure by the highest possible and safe pressure. Check all dampers with smoke and ensure that they are closed properly. Check doors and hatches and ensure correct closure. Inspect the wall perimeter (above and below any false ceiling) and the floor slab for any major leaks and note their size and location.

A10.2.7.2.5 Ensure that there will be no pressure differential between the area of the fan outside the enclosure, and along the return air paths around the boundary of the enclosure under test. This may be done visually or by pressure measurement.

A10.2.7.3 Measurement of Bias Pressure Pbt during fan testing

A10.2.7.3.1. P_{bt} is used to correct for the measured pressure differential (inside/outside) the enclosure in order to calculate the enclosure leakage characteristics.

A10.2.7.3.2. Seal the fan unit and, without the fan(s) operating, observe the enclosure differential pressure-measuring device which may take up to 30 s.

Record the static pressure (P_{bt}) and its direction at the time of the door fan test. If the absolute value of P_{bt} is more than 3 Pa(i.e. $| P_{bt} | > 3$ Pa), P_{bt} shall be reduced before continuing the leakage test.

A10.2.7.3.3. Make every effort to reduce the static pressure P_{bt} by shutting down air handling equipment even though it can operate during a discharge.

If a subfloor pressurisation airhandler cannot be shut down for the test and leaks exist in the subfloor, these leaks cannot be accurately measured. During the test as many floor tiles as possible should be lifted to reduce the amount of subfloor pressurisation. If not possible, every effort should be made to reduce subfloor leaks to insignificance.

Caution: Suitable measurements shall prevent danger due to removing floors

A10.2.7.3.4. In the event of fluctuating bias pressures (such as those created by wind effects), it may not be possible to achieve the necessary correlation accuracy in the fan test results. These fluctuating pressures may need to be eliminated before accurate fan tests can be carried out.

A10.2.7.4 Measurement of leakage rate

A10.2.7.4.1 Measure the air temperature inside the enclosure T_e, and measure the air temperature outside the enclosure T_o, at several points. If the location of leaks is not known, use the average value; otherwise, use the average value weighted according to the known location of the leaks. Verify the temperatures at the end of the test.

A10.2.7.4.2 Unseal the fan inlet or outlet and connect the fan flow pressure measuring device.

A10.2.7.4.3 Use the fan unit to depressurize the enclosure to the maximum extent, but by not more than 60 Pa. Allow the enclosure differential pressure measuring reading to stabilize (for at least 30s) and record the pressure differential i.e. (P_f + P_{bt}). Repeat at not less than four more fan unit flow rates to give five readings more or less evenly spaced over the range down to 10 Pa. At each pressure difference, measure the air flow and pressure difference across the enclosure/fan boundary. After the fan and instrumentation have stabilised, the average over an interval equal to, or greater than, 10 s should be used if fluctuations are observed. If stable readings cannot be obtained at 10 Pa then only go down to the lowest pressure at which stable readings can be obtained.

A10.2.7.4.4 Use the fan unit to pressurize the enclosure and repeat the procedure of A10.2.7.4.3. Again record values of (P_f + P_{bt}), which will be positive.

A10.2.7.4.5 Repeat the zero flow pressure difference (bias pressure P_{bt}) measurement. If the reading differs from the initial zero flow pressure difference reading by more than 1Pa, repeat the test.

A10.2.7.5 Field Calibration Check

A10.2.7.5.1 Calculate the enclosures' equivalent leakage area (average of pressurization and depressurization) at a convenient reference pressure differential, using equations (E.17) and (E.19). The reference pressure differential should be within and in the middle of the testing enclosure pressure differential according to clause A10.2.7.4.3.

A10.2.7.5.2 In a sheet of rigid material, less than 3 mm thick and free of any penetrations, cut a sharp-edged circular or square calibration check orifice. The area of the orifice must be large enough to cause an easily measurable increase in the enclosure's leakage rate, but not so large that a different range of the fan unit must be used to measure the increased flow. A geometrical area about 50 % of the enclosure’s equivalent leakage area is likely to be suitable. Install the sheet in an unused fan unit port if possible. Otherwise, install the sheet in some other convenient enclosure opening but consider that this will modify the enclosure's leakage characteristic and reduce the accuracy of the field calibration check.

A10.2.7.5.3 Seal the fan unit and orifice, repeat the zero flow pressure difference (bias pressure P_{bt}) measurement (A10.2.7.3) and record the value of P_{bt}.

The orifice will be opened and the measurement of the leakage rate repeated (A10.2.7.4).

A10.2.7.5.4 The equivalent leakage area of the test enclosure with test orifices (average of pressurization and depressurization) will be calculated by means of the equitation E 17 and E 19 considering the reference pressure differential used in A10.2.7.5.1.

A10.2.7.5.5 The measured equivalent leakage area of the calibration check orifice (average of pressurization and depressurization) is defined as the equivalent leakage are of the test enclosure with test orifices minus the equivalent leakage area of only the test enclosure.

A10.2.7.5.6 Field calibration is acceptable if the measured equivalent leakage area of the orifice is within +/- 10 % of its geometrical area. If the difference is greater than 10 %, the fan unit should be recalibrated.

A10.2.7.6 Measurement of Bias Pressure P_{bh} under Hold Time conditions

P_{bh} is the Bias Pressure under Hold Time conditions that is used in the calculation of the Hold Time.

Set the enclosure, its surroundings, and services, to the conditions that would apply during the Hold Time – using the information from A10.2.5.

Measure P_{bh} – the pressure difference across as many boundaries of the enclosure as possible.

If a bias pressure is indicated, use smoke to detect the consequent air flow and its direction. If the existence of a bias pressure is confirmed record the pressure measuring device reading as the bias pressure (P_{bh}). P_{bh} is negative, if the enclosure pressure is minor to the neighbored area.

If the enclosure is large, or if the bias pressure is largely caused by wind or stack effects, repeat the measurement at one or more different access openings. Record all the values measured and use the largest positive value (or if only negative values are recorded, the value closest to zero) as the bias pressure.

If the bias pressure has a numerical value greater than 25% of the extinguishant/air column pressure, then the hold time is likely to be low and the enclosure may not hold the specified extinguishant concentration. The source of the excessive bias pressure should be identified and if possible permanently reduced.

A10.2.8 Calculation

A10.2.8.1 Symbols

The symbols of the quantities, and their units, used in the calculation are as follows:

A_e…….effective leakage area (m^2)

c…… design concentration of extinguishant in air for the enclosure (% *V/V*)

c_{min}minimum concentration of extinguishant in air for the protected part of the enclosure at the end of the Hold Time – not less than the extinguishing concentration (% *V/V*)

F lower leakage fraction, effective area of lower leaks divided by effective area of all leaks dimensionless

g_n……gravitational acceleration (= 9,81) (m/sec^2)

H. required protected height – this is the minimum required height of C_{min} at the end of the Hold Time (m)

H_o.....overall height of enclosure (m)

H_e.....height of equivalent sharp interface (m)

k_0……actual leakage area discharge coefficient (see equitation E1) dimensionless

k_1……leakage characteristic (see equation (E 11)) ($m^3/(s.Pa^n)$)

k_2……correlation constant (see equation (E12)) ($kg^n.m^{3(1-n)}/(s.Pa^n)$)

k_3……simplifying constant (see equation (E13)) (m/s^2)

k_4……simplifying constant (see equation (E14)) ($Pa.m^3/kg$)

n…… leakage characteristic (see equation (E10)) dimensionless

P_f……differential pressure produced by the fan (Pa)

P_{ref} differential pressure produced by the fan, used as reference pressure for calculation of A_e (Pa)

P_{mi} initial extinguishant/air column pressure (Pa)

P_{mf} final extinguishant/air column pressure…….…… …… (Pa)

P_{bt} bias pressure at the time of the fan test (Pa)

P_{bh} bias pressure during the Hold Time…… ……..(Pa)

P_c atmospheric pressure during fan calibration…… ……..(Pa)

P_t atmospheric pressure during door fan test…… ……(Pa)

Qf ….measured air flow rate through fan (m^3/s)

Q_{ref} air flow rate through fan at P_{ref}, used for calculation of A_e (Pa)

Q_l air flow rate, temperature and pressure corrected to reference conditions (20°C, 1.013 bar atmospheric pressure) (m^3/s)

T_e……air temperature inside enclosure (°C)

T_o ……air temperature outside enclosure (°C)

T_c……atmospheric temperature during calibration of fan unit… ……(^oC)
t……predicted hold time (s)

V_g enclosure gross volume (m^3)

ρ_a……air density (1,205 at 20°C and 1,013 bar) (kg/m^3)

ρ_{mf} extinguishant/air mixture density at the minimum concentration C_{min}
20°C and 1,013 bar atmospheric pressure…… (kg/m^3)

ρ_{mi} extinguishant/air mixture density at design concentration c,
20°C and 1,013 bar atmospheric pressure ……..……..(kg/m^3)

ρ_m extinguishant/air mixture density at 20°C and 1.013 bar atmospheric pressure (kg/m^3)

ρ_e……extinguishant density at 20°C and 1.013 bar atmospheric pressure (kg/m^3)

A10.2.8.2 Air flow rates

From the measured values of (P_f + P_{bt}) and P_{bt} calculate the values of P_f and, using the fan calibration data (see A10.2.3.1), the corresponding air flows Q_f through the fan.
For each set of results (pressurization and depressurization) express the fan test results in the form:

$$|Q_l| = k_1 |P_f|^n \qquad \text{(E1)}$$

The leakage coefficients k_o and n and the correlation coefficients (r or r^2) will be determined by means of the method of least squares for adaptation to the test data:

$$\ln|Q_l| = \ln k_0 + \ln|P_f|$$

Check that the correlation coefficients of each set are not less than r = 0.99 (r^2 = 0.98). The two sets will almost always have different values of k_l and n.

If the correlation coefficient is too less:
- check the fluctuating bias pressure
- check, if e.g. dampers, hatches are moveable
- repeat the door-fan test.

The corrected values of k_0 shall be calculated by means of equitations E2 and E3 and named k_1.

for depressurization

$$k_1 = k_0\left(\frac{P_C(T_e+273)}{P_t(T_c+273)}\right)^{1/2}\left(\frac{T_O+273}{T_e+273}\right)\left(\frac{P_t(20+273)}{1.013(T_O+273)}\right)^n \qquad \text{(E2)}$$

for pressurization

$$k_1 = k_0\left(\frac{P_C(T_O+273)}{P_t(T_c+273)}\right)^{1/2}\left(\frac{T_e+273}{T_O+273}\right)\left(\frac{P_t(20+273)}{1.013(T_e+273)}\right)^n \qquad \text{(E3)}$$

Note: Equations (E2) and (E3) correct the flow rates for the effects of temperature and pressure differences on air density, assuming that:
- the flowmeter is of the usual type, which gives a pressure signal proportional to the air density and the square of the volume flow rate.
- Considering a defined pressure difference the air flow (between outside and inside enclosure) is reverse proportional to nth square of the air density.

The effects of humidity and viscosity are ignored.

A10.2.8.3 Column pressure

Calculate the density of the extinguishant/air mixture at 20°C at the design concentration C using the equation:

$$\rho_{mi} = \frac{\rho_e\, c}{100} + \frac{\rho_a(100 - c)}{100} \qquad \text{(E4)}$$

For enclosures with mixing, calculate the density of the extinguishant/air mixture at 20°C at the minimum concentration C_{min} using the equation:

$$\rho_{mf} = \frac{\rho_e\,(c_{min})}{100} + \frac{\rho_a\,(100 - c_{min})}{100} \qquad \text{(E5)}$$

Calculate the corresponding initial extinguishant/ air mixture column pressure at the base of the enclosure using the following equation :

$$P_{mi} = g_n H_o\,(\rho_{mi} - \rho_a) \qquad \text{(E6)}$$

Calculate the final column pressure by means of the following equitation, if P_{bh} is negative, and check, whether P_{mf} is more than the absolute value of P_{bh}. If not, the equitations for calculating the Hold time are not suitable (because the leakage differential pressure causes reverse flow.

Calculate the corresponding final column pressure P_{mf} as follows:

For enclosures without mixing:

$$P_{mf} = g_n\, H\,(\rho_{mi} - \rho_a) \qquad \text{(E7)}$$

With:

$$H_e = H_o - (H_o - H)(C/2C_{min}) \qquad \text{(E8)}$$

For enclosures with mixing:

$$P_{mf} = g_n\, H_o\,(\rho_{mf} - \rho_a) \qquad \text{(E9)}$$

A10.2.8.4 Leakage characteristics

Determine the average values of the leakage characteristics k_1 and n, as follows.

Calculate the average values (i.e. of the pressurisation and depressurisation data) of
$Q_l = k_1|P_f|^n$
for values of P_f equal to P_m, and for P_f equal to 0.5 P_{mi}. These are Q_{lm} and $Q_{lm/2}$ respectively:

$$n = \frac{\ln Q_{lm} - \ln Q_{lm/2}}{\ln 2} \qquad \text{(E10)}$$

$$k_1 = \exp\left(\frac{(\ln Q_{lm/2})(\ln P_{mi}) - (\ln Q_{lm})(\ln P_m - \ln 2)}{\ln 2}\right)\frac{(\text{ELA} + \text{leakage orifice})}{(\text{ELA})} \qquad \text{(E11)}$$

with:

ELA	measured equivalent leakage area of enclosure (A10.2.7) using E17 and E19.
Leakage orifice	according to A10.2.6.4

A10.2.8.5 Correlation constant

Calculate the correlation constant k_2 using the equation:

$$k_2 = k_1\left[\frac{\rho_a}{2}\right]^n \qquad \text{(E12)}$$

Calculate the simplifying constant k_3 using the equation:

$$k_3 = \frac{2 g_n (\rho_{mi} - \rho_a)}{\rho_{mi} + \rho_a \left(\frac{F}{1-F}\right)^{1/n}} \qquad \text{(E10)}$$

Calculate the simplifying constant k_4 using the equation:

$$k_4 = \frac{2 P_{bh}}{\rho_{mi} + \rho_a \left(\frac{F}{1-F}\right)^{1/n}} \qquad \text{(E11)}$$

A10.2.8.6 Predicted hold time: enclosures without mixing

For enclosures without mixing, the predicted hold time t for the extinguishant concentration at height H to fall from the design concentration c to the minimum c_{min} may be calculated by assuming the extinguishant distribution in the enclosure, and calculating the hold time for an equivalent sharp interface which would give the same column pressure and rate of loss of extinguishant as the actual extinguishant distribution.

If the enclosure is a standard enclosure and c_{min} is greater than or equal to 0.5c, assume that the extinguishant concentration at any particular instant equals the design concentration from the lower boundary of the enclosure up to a certain height, and above this decreases linearly with increasing height to zero at the upper boundary of the enclosure. Calculate the height H_e of the equivalent sharp interface using the equation E8.

Considering F=0.5 the predicted hold time is:

$$t = \frac{V_g}{H_o} \frac{(k_3 H_o + k_4)^{(1-n)} - (k_3 H_e + k_4)^{(1-n)}}{(1-n)\, k_2\, F\, k_3} \qquad \text{(E15)}$$

If $c_{min} < 0.5\ C$ calculate hold time according to E15 using H instead of H_e.

A10.2.8.7 Predicted Hold Time: enclosures with mixing

For enclosures with mixing, assume F = 0,5 and calculate the predicted hold time t for the extinguishant concentration in the enclosure to fall from the design concentration to the minimum concentration C_{min} (see 2.10) using the equation:

$$t = \frac{V_g}{F k_2} \int_{\rho_{mf}}^{\rho_{mi}} \left[\frac{2 g_n H_o (\rho_m - \rho_a)^{(n+1)/n} + 2 P_{bh} (\rho_m - \rho_a)^{1/n}}{\rho_m + \rho_a \left(\frac{F}{1-F}\right)^{1/n}} \right]^{-n} d\rho_m \qquad \text{(E16)}$$

Solve the equation by a method of approximation, for example by using Simpson's rule using an even number (not less than 20) of intervals.

A10.3 Treatment of enclosures with predicted minimum hold times less than the recommended value

A10.3.1 General

If the predicted minimum hold time, calculated in accordance with A10.2, is less than as recommended in part 2.10 of this standard then A10.3.2 to A10.3.5 shall be implemented in sequence.

A10.3.2 Leakage area

To illustrate the scale of the problem calculate the effective leakage area, A_e from the equation:

$$A_e = \frac{Q_{ref} \left(\frac{\rho_a}{2}\right)^{1/2}}{(2P_{ref})} = k_1 P_{ref}^{\,n-1/2} \left(\frac{\rho_a}{2}\right)^{1/2} \qquad \text{(E17)}$$

At 20° C and 1.013 bar, equation E17 reduces to:

$$A_e = 0.7762\, k_1\, P_{ref}^{n-1/2} \quad \text{(E18)}$$

The equivalent leakage area (ELA) may be calculated as:

$$ELA = A_e / 0.61 \quad \text{(E19)}$$

The ELA is used for fan calibration checks and for identification of actual leaks. It is the area of a circular sharp edged orifice which has the same value of A_e as the actual leakage area A_t.

A10.3.3 Improved sealing of the enclosure

Consideration should be given to improving the sealing of the enclosure. If the sealing is improved and the new predicted hold time, after new fan test measurements in accordance with A10.2.7.4, is not less than the minimum recommended value, no further action is necessary.

A10.3.4 Quantification and location of leaks

A10.3.4.1 General

The lower leaks are those through which the extinguishant/air mixture will escape from the enclosure; conversely upper leaks are those through which air will flow into the enclosure. In an enclosure without bias pressure the 'neutral plane' (between inflow and outflow) can be taken as the mid height of the enclosure. For the purpose of this assessment, lower leaks are assumed to be those below the neutral plane, and upper leaks are those above it.

The fan test does not show the location of the leaks or the value of the lower leakage fraction *F*. In section A10.2 it is assumed that the value of F is 0.5, all the lower leaks are in the base of the enclosure and all the upper leaks are in the top of the enclosure. This is the worst case and gives the minimum value for hold time.

If some lower leaks are above the base of the enclosure or if some upper leaks are below the top of the enclosure, the hold time will be underestimated but a simple mathematical treatment of this case is not possible.

The hold time will also be underestimated if *F* is not 0,5 and the effect of this can be calculated.

A10.3.4.2 Second calculation of hold time

Make a second calculation of the hold time using equations (E12),(E13),(E14) and (E15) or equation (E16), as appropriate, assuming *F* = 0,15. If this value is more than the recommended minimum (see 2.10) then make an estimate of the actual value of *F* using the method in A10.3.4.3.

A10.3.4.3 Method of estimating *F*

Temporarily seal upper leaks, such as dampers, that can be traced using smoke. Repeat the fan test and calculate the reduced effective leakage area A_e using (E17 and E19).

Remove the sealing from upper leaks and seal lower leaks, that can be traced using smoke. Repeat the fan test and calculate the reduced effective leakage area A_e using (E17 and E19).

The area of the temporarily sealed upper leaks can thus be quantified and the remaining open area treated as 50% upper leaks and 50% lower leaks. Calculate the new value of F (with: ELA_1 = value of original ELA-measurement).

$$F=0.5\,(ELA_1 + ELA_2 - ELA_3)/(ELA_1) \quad \text{(E20)}$$

A10.3.5 Final calculation of hold time

Using the value of *F* determined as in A10.3.4.3, which should not be more than 0,5 or less than 0,15, recalculate the hold time using equations (E12),(E13),(E14) and (E15) or equation (E16) as appropriate.

A10.4 Report

Prepare a written report containing the following information:

a) the enclosure leak flow characteristics (i.e. the average values of k_1, and *n)*;

b) the design concentration of extinguishant, minimum concentration, and the extinguishant to be used;

c) the gross volume of the enclosure;

d) the quantity of extinguishant provided;

e) the height of the enclosure;

f) the height of the highest hazard;

g) the predicted hold time and whether or not the value complies with the recommendation of clause 2.10.

h) the information on the arrangement and status of the enclosure, surroundings and services as specified in A10.2.5 and A10.2.7.1.4.

i) the current calibration data for the fan unit and the pressure measuring devices, corresponding certificates if available, and the results of the field calibration check;

j) the test results, including a record of the test measurements and any appropriate calculations.

k) size and location of leaks, if identified.

Appendix A11 Example for design of pipes and pipe connections

Section	Service pressure Bar	Test pressure bar**	Sort of pipe	standard	material	quality	Certificate according to EN10204
Pipework between container and selector valve*	as in the container at maximum temperature according to clause 2.7.2	1,5 times service pressure	seamless welding	DIN 1629 ***, DIN 17175 DIN 1626 ***, DIN 17177	St 37.0 St 35.8 St 37.0 St 37.8	 III III	3.1 B 3.1 B 3.1 B 3.1 B
Pipework downstream of selector valve	as calculated	1,5 times as calculated	seamless welding	DIN 1629 *** DIN 1626 ***	St 37.0 St 37.0		2.2 2.2
Fitting downstream of selector valve****	as calculated	1,5 times as calculated		DIN EN 10242	EN-GJMW-400-5 (acc. EN 1560)		2.2

* Safety valves shall ensure that service pressure cannot be increased by leakage from the container valves

** leakage test of the pipes shall result from tests of inside pressure with water according to the standard or a useful test without destruction

*** Pipes according to DIN 1629 and DIN 1626 maximum 160 bar service pressure.

**** if high-class fittings are used, mark shall be clear. “Red spot” or mark “D” is not necessary.

Table A11.1 Pipe quality requirements

A11.1 For design of pipes the AD-leaflets W4 – Pipes of non-alloy and alloy steels – and W 10 – materials for deep temperatures , iron materials – shall be noticed. Only pipes according to table 3.1 shall be used.

Tube sheet thickness shall be designed according DIN 2413 section I in consideration of AD-leaflet W 10. Measurements shall meet DIN 2448/DIN 2458, pipes shall have minimum normal tube sheet thickness.
Pipes according to DIN 2448 and DIN 2458 with normal tube sheet thickness shall not be used as tubes. Tubes require larger thicknesses.
Pipes according to DIN2391 and DIN 2393 may be used.

Fittings shall be marked by a red spot and the letter D.

A11.2 The gas installation pipework shall be earthed. If necessary, electrical connections equipotential bonding (e.g. regarding non-conductive pipe joints) between all pipes shall be provided or the installation shall be earthed at different points (auxiliary equipotential bonding).

Pipework have to be connected with the main equipotentional bonding according to DIN VDE 0100, part 410 clause 413.1.2.1. The equipotential bonding has to be dimensioned in accordance with DIN VDE 0100, part 540. The cross section of the potential equalization conductor has to be at least as large as half of the cross section of the biggest protective grounding, at least 6 mm² Cu or equal conductance. Beyond that in Ex-areas an auxiliary equipotential bonding is needed according to DIN VDE 0165, clause 6.3. This equipotential bonding has to meet the requirements according to DIN VDE 0100, part 410, clause 413.1.2.2. The minimum cross section of the potential equalization conductors shall meet DIN VDE 0100, part 540, clause 9, at least 2,5 mm² Cu (if mechanically protected) or 4 mm² without mechanical protection.

Notes:

- *In ex-areas the national regulations have to be met*
- *Regarding lightning protection the national regulations have to be met.*

A11.3 Marking shall be in accordance with DIN 2403.

Appendix B1 Extinguishing and design concentrations for Argon

Fuel	C_L Extinguishing concentration		C_D Design concentration
	in Vol% Argon		in Vol% Argon
	Cup Burner [1]	enclosure [2]	
Acetone	38,8		60,5
Diethylether	44,8		69,9
Ethanol	44,1		68,8
Methanol	55,6		86,7
n-Heptane	39,1 [3]	40,8	53,0
n-Hexane	41,5		64,7
n-Pentane	41,7		65,1
Toluene	35,5		55,4

[1] according to appendix A4

[2] according to appendix A9

Table B1.1: Flammable liquids

Source of data: CEA[12]-R&D-project "Extinguishing behaviour of inert gases", VdS;
[3]: VdS test report No. CHL02024 dated 24.05.2002

Extinguishing concentration: for Cup Burner determined on basis of measured oxygen concentrations, for room tests determined on basis of agent quantity, rounded on first decimal

Design concentration: determined from the extinguishing concentration by use of appropriate design factor, rounded on first decimal

Special equipment	C_L Extinguishing concentration in Vol% Argon	C_D Design concentration in Vol% Argon
Computer installations, EDP-rooms, electrical switch and distribution rooms [1]		50,4 [2]
Cable floors [1]		50,4 [2]

[1] storage or processing of materials is not allowed.

[2] Note: corresponding to 95 % of design concentration of n-heptane. In appendix A9 testing methods for determining the extinguishing concentration for plastic objects (e.g. IT-rooms) are explained. If results of practical tests are available, the design concentrations in table B1.2 will be changed: extinguishing concentration is the maximum of four determined extinguishing concentrations of plastics and cables..

Table B1.2: Special equipment

[12] CEA: Comité Européen des Assurances

Fuel	C_L Extinguishing concentration in Vol% Argon	C_D Design concentration in Vol% Argon
Wood crib	30,7 [1)]	[2)]

[1)] according to appendix A9.

[2)] At this time there is no application foreseen. If in an exceptional case the extinguishing concentration shall be taken as basis for the design of an extinguishing installation, this is only allowed after agreement of the appropriate authority..

Table B1.3: Solid fuels

Source of data: CEA R&D-project “Extinguishing behaviour of inert gases”, VdS

Design concentration: determined from the extinguishing concentration by use of appropriate design factor, rounded on first decimal.

Appendix B2 Extinguishing and design concentrations for IG541

Fuel	C_L Extinguishing concentration		C_D Design concentration
	in Vol% IG541		in Vol% IG541
	Cup Burner [1]	enclosure [2]	
Acetone	31,7		49,5
Diethylether	35,7		55,7
Ethanol	35,5		55,4
Methanol	43,8		68,3
n-Heptane	33,8	37,0	48,1
n-Hexane	34,8		54,3
n-Pentane	32,9		51,3
Toluene	28,1		43,8

[1] according to appendix A4

[2] according to appendix A9

Table B2.1: Flammable liquids

Source of data: CEA[13]-R&D-project "Extinguishing behaviour of inert gases", VdS

Extinguishing concentration: for Cup Burner determined on basis of measured oxygen concentrations, for room tests determined on basis of agent quantity, rounded on first decimal

Design concentration: determined from the extinguishing concentration by use of appropriate design factor, rounded on first decimal

Special equipment	C_L Extinguishing concentration in Vol% IG541	C_D Design concentration in Vol% IG541
Computer installations, EDP-rooms, electrical switch and distribution rooms [1]		45,7 [2]
Cable floors [1]		45,7 [2]

[1] storage or processing of materials is not allowed.

[2] Note: corresponding to 95 % of design concentration of n-heptane. In appendix A9 testing methods for determining the extinguishing concentration for plastic objects (e.g. IT-rooms) are explained. If results of practical tests are available, the design concentrations in table B2.2 will be changed: extinguishing concentration is the maximum of four determined extinguishing concentrations of plastics and cables..

Table B2.2: Special equipment

[13] CEA: Comité Européen des Assurances

Fuel	C_L Extinguishing concentration in Vol% IG541	C_D Design concentration in Vol% IG541
Wood crib	28,1 [1)]	[2)]

[1)] according to appendix A9.

[2)] At this time there is no application foreseen. If in an exceptional case the extinguishing concentration shall be taken as basis for the design of an extinguishing installation, this is only allowed after agreement of the appropriate authority..

Table B2.3: Solid fuels

Source of data: CEA R&D-project “Extinguishing behaviour of inert gases”, VdS

Design concentration: determined from the extinguishing concentration by use of appropriate design factor, rounded on first decimal.

Appendix B3 Extinguishing and design concentrations for Nitrogen

Fuel	C_L Extinguishing concentration		C_D Design concentration
	in Vol% Nitrogen		in Vol% Nitrogen
	Cup Burner [1]	enclosure [2]	
Acetone	29,9		46,6
Diethylether	33,8		52,7
Ethanol	34,5		53,8
Methanol	41,2		64,3
n-Heptane	32,3	36,6	47,6
n-Hexane	32,6		50,9
n-Pentane	32,4		50,5
Toluene	28,0		43,7

[1] according to appendix A4

[2] according to appendix A9

Table B3.1: Flammable liquids

Source of data: CEA[14]-R&D-project "Extinguishing behaviour of inert gases", VdS
Extinguishing concentration: for Cup Burner determined on basis of measured oxygen concentrations, for room tests determined on basis of agent quantity, rounded on first decimal
Design concentration: determined from the extinguishing concentration by use of appropriate design factor, rounded on first decimal

Special equipment	C_L Extinguishing concentration in Vol% Nitrogen	C_D Design concentration in Vol% Nitrogen
Computer installations, EDP-rooms, electrical switch and distribution rooms [1]		45,2 [2]
Cable floors [1]		45,2 [2]

[1] storage or processing of materials is not allowed.

[2] Note: corresponding to 95 % of design concentration of n-heptane. In appendix A9 testing methods for determining the extinguishing concentration for plastic objects (e.g. IT-rooms) are explained. If results of practical tests are available, the design concentrations in table B3.2 will be changed: extinguishing concentration is the maximum of four determined extinguishing concentrations of plastics and cables..

Table B3.2: Special equipment

[14] CEA: Comité Européen des Assurances

Fuel	C_L Extinguishing concentration in Vol% Nitrogen	C_D Design concentration in Vol% Nitrogen
Wood crib	28,6 [1)]	[2)]

[1)] according to appendix A9.

[2)] At this time there is no application foreseen. If in an exceptional case the extinguishing concentration shall be taken as basis for the design of an extinguishing installation, this is only allowed after agreement of the appropriate authority..

Table B3.3: Solid fuels

Source of data: CEA R&D-project “Extinguishing behaviour of inert gases”, VdS

Design concentration: determined from the extinguishing concentration by use of appropriate design factor, rounded on first decimal.

Appendix B4 Extinguishing and design concentrations for IG55

Fuel	C_L Extinguishing concentration		C_D Design concentration
	in Vol% IG55		in Vol% IG55
	Cup Burner [1]	enclosure [2]	
Acetone			
Diethylether			
Ethanol			
Methanol			
n-Heptane	32,0 [3]	37,0 [4]	48,1
n-Hexane			
n-Pentane			
Toluene			

[1] according to appendix A4

[2] according to appendix A9

Table B4.1: Flammable liquids

Source of data: [3] CNPP, [4] VdS

Extinguishing concentration: for Cup Burner determined on basis of measured oxygen concentrations, for room tests determined on basis of agent quantity, rounded on first decimal

Design concentration: determined from the extinguishing concentration by use of appropriate design factor, rounded on first decimal

Special equipment	C_L Extinguishing concentration in Vol% IG55	C_D Design concentration in Vol% IG55
Computer installations, EDP-rooms, electrical switch and distribution rooms [1]		45,7
Cable floors [1]		45,7

[1] storage or processing of materials is not allowed.

[2] Note: corresponding to 95 % of design concentration of n-heptane. In appendix A9 testing methods for determining the extinguishing concentration for plastic objects (e.g. IT-rooms) are explained. If results of practical tests are available, the design concentrations in table B4.2 will be changed: extinguishing concentration is the maximum of four determined extinguishing concentrations of plastics and cables..

Table B4.2: Special equipment

Fuel	C_L Extinguishing concentration in Vol% IG55	C_D Design concentration in Vol% IG55
Wood crib	31,6 [1)]	[2)]

[1)] according to appendix A9.

[2)] At this time there is no application foreseen. If in an exceptional case the extinguishing concentration shall be taken as basis for the design of an extinguishing installation, this is only allowed after agreement of the appropriate authority..

Table B4.3: Solid fuels

Source of data: VdS

Design concentration: determined from the extinguishing concentration by use of appropriate design factor, rounded on first decimal.